Deseret
Generation & Transmission Co-operative

Bonanza Power Plant
12500 East 25500 South ☐ Vernal, Utah 84078-8525
(435) 789-9000 ☐ Fax (435) 781-5816

RECEIVED
MAR 21 2000
8P - AR

March 20, 2000

Mr. Richard R. Long
Director, Air program (Mail Code 8P2-A)
999 18th Street, Suite 500
Denver, Colorado 80202-2466

Re: Bonanza Title V Application

Dear Mr. Long:

Please find enclosed three copies of the final Title V application for the Bonanza Power Plant owned and operated by Deseret Generation and Transmission Co-operative. The plant is located in Eastern Utah on the Unitah and Ouray Reservation. This permit is submitted under the authority of 40 CFR Part 71.

A draft of this application has been previously reviewed with Monica Morales, Mike Owens and Larry Wapensky of your staff. This Title V application represents that draft application with your staff's recommended changes added.

The annual emission fees have been sent to the appropriate lockbox in Pittsburgh. A copy of that check is enclosed as a part of the application.

Any questions regarding this application should be directed to either Howard Vickers or Mike Goddard at the plant. Howard's number is (435-781-5706); His E-mail address is howardlv@deseretgt.com. Mike's number is (435-781-5704); his E-mail address is mgoddard@deseretgt.com.

We have enjoyed working with your staff on both the PSD permit and this Title V application. They have been very helpful in both areas and their input and response has been very timely.

Sincerely,

Stanley J. Gordon

Stanley J. Gordon
Plant Manager

03-20-00 0360859 0859134 14 005 10

Mellon Bank

Deseret

10714 South Jordan Gateway • South Jordan, Utah 84095
Phone 801-619-6500 • FAX 801-619-6599

GENERAL ACCOUNT

MURRAY OFFICE
ZIONS FIRST NATIONAL BANK
MURRAY, UTAH
31-5/1240

DATE	CHECK NO	CHECK AMOUNT
3/16/2000	61538	182,086.88

PAY ONE HUNDRED EIGHTY TWO THOUSAND EIGHTY SIX DOLLARS AND 88/100

DESERET GENERATION & TRANSMISSION CO-OPERATIVE

TO THE ORDER OF

U.S. ENVIRONMENTAL PROTECTION AGENCY
MELLON BANK
ATTN: PART 71 PERMIT ACCOUNTING
LOCKBOX 360859
PITTSBURGH, PA 15251-6859

NOT VALID 60 DAYS AFTER DATE OF ISSUE

⑈061538⑈ ⑆124000054⑆ 15 00426 0⑈ ⑈0018208688⑈

DESERET GENERATION & TRANSMISSION CO-OPERATIVE

INVOICE NUMBER	INVOICE DATE	INVOICE AMOUNT	P.O. NUMBER	CO. ACCT. SUB.	COST CODE	AMOUNT
EMMISSION FEES FOR THE TITLE V program year 2000						
		182,086.88				
VC= 08AR0597						

CHECK.DATE	CHECK.NUMBER	CHECK.AMOUNT
3/16/2000	61538	182,086.88

ORIGINAL

T5 Permit #
V-OU-0004-00.00

BONANZA STATION - BONANZA 1

INITIAL APPLICATION
FOR
OPERATING PERMIT
UNDER
CAA TITLE 5

SUBMITTED TO:

Environmental Protection Agency
Region 8
999 18th Street, Suite 500
Denver, Colorado 80202

BY:

Deseret Generation and Transmission Co-operative
10714 South Jordan Gateway, Suite 300
South Jordan, Utah 84095

March 2000

Title Five application prepared by
Howard Vickers
Michael Goddard
of
Deseret Generation and Transmission Co-operative
(Deseret)

U.S. ENVIRONMENTAL PROTECTION AGENCY
APPLICATION FOR FEDERAL OPERATING PERMIT, 40 CFR PART 71

APPLICATION FORM IE - INSIGNIFICANT EMISSIONS

INSTRUCTIONS: List each source eligible for insignificant treatment under § 71.5(c)(11)(ii). In the "number" column, indicate the number of units qualifying under each description. Each description must be specific enough to describe the source of emissions. List emission units separately if they have dissimilar descriptions, including dissimilar capacities or sizes and other factors. Please check the appropriate column to indicate whether the source meets the emissions criteria under § 71.5(c)(11)(ii)(A) and (B) for regulated air pollutants except hazardous air pollutant (RAP, except HAP), and for HAP, respectively.

Number	Description of Activities or Emission Units	RAP, except HAP	HAP
1	**1-2 Auxiliary Boiler**	X	X
1	**1-3 Emergency Diesel Generator**	X	X
1	**1-4 Emergency Diesel Fire Pump**	X	X
1	**1-5 Construction Heater (LPG)**	X	X

U.S. ENVIRONMENTAL PROTECTION AGENCY
APPLICATION FOR FEDERAL OPERATING PERMIT, 40 CFR PART 71

FORM EMISS - EMISSIONS CALCULATIONS

INSTRUCTIONS: Use this form to calculate potential to emit (PTE) for applicability purposes and actual emissions for fee purposes for each emissions unit, control device, or alternative operating scenario identified in section I of form **GIS**. If form **FEE** does not need to be submitted with the application, do not calculate actual emissions.

A. Emissions Unit ID : **1-1**

B. Identification and Quantification of Emissions

Instructions: First, list each air pollutant that is either regulated at the unit or present in major amounts. Second, list any other regulated pollutant (for fee calculation) emitted at the unit that have not already been listed. Each HAP added to the list in this step may be simply listed as "HAP". Next, calculate PTE for applicability purposes and actual emissions for fee purposes for each listed air pollutant. Do not calculate PTE for air pollutants listed solely for fee purposes. Include all fugitives, including those that do not count towards applicability, when calculating actual emissions. At a minimum, round to the nearest ton for yearly values or pounds for hourly values. Attach examples of calculations that illustrates the methodology used.

Air Pollutants (including regulated air pollutants and pollutants for which the source is major)	Emission Rates			CAS No.
	Actual Annual Emissions (tons/yr)	Potential to Emit		
		Hourly (lb/hr)	Annual (tons/yr)	
CO	**392**	**114**	**501**	**630-08-0**
SO2	**1021**	**458**	**1957**	**7446-09-5**
NOx	**5117**	**2289**	**10026**	**10102-44-0**
PM-10	**244**	**131**	**573**	**N/A**
PM	**244**	**130**	**596**	**N/A**
VOC	**55**	**16**	**70**	**N/A**
Lead	**1.0**	**4.0**	**1.0**	**7439-92-1**
Hydrofluoric Acid	**11**		**MU**	**7664-39-3**
HAP	**8.0**		**MS**	**N/A**
Hydrochloric Acid	**45**		**MU**	**7647-01-0**

U.S. ENVIRONMENTAL PROTECTION AGENCY
APPLICATION FOR FEDERAL OPERATING PERMIT, 40 CFR PART 71

FORM PTE - POTENTIAL TO EMIT SUMMARY

INSTRUCTIONS: Complete this form once for the facility. You may find it helpful to complete form **EMISS** for each emissions unit before completing this form. For each emissions unit with emissions that count towards applicability, list the emissions unit ID and the PTE for the air pollutants listed below. If there are other air pollutants not listed below for which the source is a major source, provide attachments naming the air pollutant and showing calculation of the total for that pollutant. Round values to the nearest ton. Add all values together in each column and enter the total in the space provided at the bottom of the table. Also report these totals in section **J** of form **GIS**.

Emissions Unit ID	Regulated Air Pollutants and Pollutants for which the Source is Major						
	NOx (tons/yr)	VOC (tons/yr)	SO2 (tons/yr)	PM10 (tons/yr)	CO (tons/yr)	Lead (tons/yr)	HAP (tons/yr)
1-1 Main Boiler	**10026**	**70**	**1957**	**573**	**501**	**1**	**86**
TOTALS	**10026**	**70**	**1957**	**573**	**501**	**1.0**	**86**

U.S. ENVIRONMENTAL PROTECTION AGENCY
APPLICATION FOR FEDERAL OPERATING PERMIT, 40 CFR PART 71

FORM CP - COMPLIANCE PLAN

INSTRUCTIONS: Complete this form once for the facility.

A. Description of Compliance Status of the Source with Respect to all Applicable Requirements

Except as indicated in section B, this facility will be in compliance with all applicable requirements at the time of permit issuance and this facility will continue to comply with these requirements ☒ YES ☐ NO

This facility will meet all applicable requirements that take effect during the term of the permit on a timely basis ☒ YES ☐ NO

B. Description for Applicable Requirements for which the Facility will not be in Compliance at Permit Issuance

Unit ID	Applicable Requirement	Narrative Description of How Compliance Will be Achieved
	None	

C. Schedule of Compliance

Instructions: Complete this section if the source is not in compliance with an applicable requirement at permit issuance or if a detailed schedule is required by an applicable requirement, judicial consent decree or administrative order. For sources not in compliance, the schedule must contain a schedule of remedial measures, including an enforceable sequence of actions with milestones, leading to compliance. You must include the date of final compliance in the schedule.

Unit ID	Applicable Requirement	Remedial Measure or Action	Date Milestone or Action Will be Achieved

D. Progress Reports

Instructions: Complete this section if the facility is required to have a schedule of compliance to remedy a violation. Progress reports must be submitted at least every 6 months during the term of the permit.

Frequency for submittal of progress reports _____ Starting date for submittal of progress reports ____/____/____

OMB Control No. 2060-0336, Approval Expires 05-31-2000

U.S. ENVIRONMENTAL PROTECTION AGENCY
APPLICATION FOR FEDERAL OPERATING PERMIT, 40 CFR PART 71

FORM CC-2 - COMPLIANCE CERTIFICATION

INSTRUCTIONS: This form must be completed once for the facility with respect to all applicable requirements at the facility and must be signed by a responsible official.

A. Schedule for Submission of Compliance Certifications During the Term of the Permit

Instructions: Indicate how often you are required to submit compliance certifications and when the first one will be submitted. Compliance certifications are required to be submitted at least once per year during the term of the permit.

Frequency of submittal: **Annually** Beginning: **03/22/2000**

B. Statement of Compliance with Enhanced Monitoring and Compliance Certification Requirements

The facility is in compliance with all applicable enhanced monitoring and compliance certification requirements ☒ YES ☐ NO

C. Certification of Compliance With All Applicable Requirements:

Instructions: This certification must be signed by a responsible official. Applications without a signed compliance certification will be returned as incomplete.

I certify that based on information and belief formed after reasonable inquiry, the part 71 source identified in this application is

☒ in compliance with all applicable requirements.

☐ not in compliance with all applicable requirements.

Signature Stanley J. Gordon Date: 3/20/00

Name (typed) **Stanley J. Gordon**

U.S. ENVIRONMENTAL PROTECTION AGENCY
APPLICATION FOR FEDERAL OPERATING PERMIT, 40 CFR PART 71

APPLICATION FORM CTAC - CERTIFICATION OF TRUTH, ACCURACY, AND COMPLETENESS BY RESPONSIBLE OFFICIAL

INSTRUCTIONS: One copy of this form must be completed, signed, and sent with each submission of documents (i.e., application forms, updates to applications, reports, or any information required by a part 71 permit).

P. Responsible Official

Name: (Last) **Gordon** (First) **Stanley** (MI) **J**

Title: **Plant Manager**

Street or P.O. Box: **12500 East 25500 South**

City : **Vernal** State: **UT** ZIP: **84078**

Telephone **(435)781-5701** Ext. _____ Facsimile **(435)781-5816**

Q. Certification of Truth, Accuracy and Completeness (to be signed by the responsible official)

I certify under penalty of law that, based on information and belief formed after reasonable inquiry, the statements and information contained in these documents are true, accurate and complete.

Name (signed) Stanley J Gordon

Name (typed) Stanley J. Gordon Date: 3 /20 / 00

U.S. ENVIRONMENTAL PROTECTION AGENCY
APPLICATION FOR FEDERAL OPERATING PERMIT, 40 CFR PART 71

FORM FEE - FEE CALCULATION WORKSHEET

INSTRUCTIONS: Use this form to initially or thereafter on a annual basis report actual emissions and calculate fees, consistent with § 71.9.

A. General Information

Instructions: All sources must complete this section.

Type of fee calculation worksheet (Check one):

☒ Initial

☐ Annual

Deadline for submitting fee calculation worksheet: **03/22/2000**

For initial fee calculation worksheets, emissions are based on (Check one):

☒ Actual emissions for the preceding year

☐ Estimates of actual emissions for the preceding year

☐ Estimates of actual emissions for the current year

If you checked the last box, provide the date the facility commence operations ____/____/____

B. Source Information

Instructions: Complete this section only if you are not applying for a permit at this time.

Source or facility name: **Bonanza Unit I**

Mailing address: Street or P.O. Box: **10714 South Jordan Gateway, Suite 300**

City: **South Jordan** State: **Ut** ZIP: **84095** -

Contact person: **Howard Vickers** Title: **Environmental Supervisor**

Telephone: (**435**) **781** -**5706** Ext. _____ Part 71 permit no.: **N/A**

C. Certification of Truth, Accuracy and Completeness

Instructions: This form must be signed by the responsible official.

I certify under penalty of law that, based on information and belief formed after reasonable inquiry, the statements and information contained in this fee calculation worksheet (and attachments) are true, accurate and complete.

Name (signed) Stanley J Gordon

Name (typed): **Stanley J. Gordon** Date: 3 / 20 / 00

D. Annual Emissions Report for Fee Calculation Purposes -- Non-HAP

Instructions: This form is used to report calendar-year actual emissions of regulated pollutants (for fee calculation) except for HAP, and is used for both initial and annual fee calculation purposes. Section E is used to report actual emissions of HAP. Quantify all actual emissions, including fugitives, but do not include insignificant emissions. Round to the nearest ton. Sum the emissions in each column and enter a subtotal at the bottom of the page. If a subtotal is greater than 4,000 tons, enter 4,000. Submit attachments showing calculations.

This data is for 1999 (year).

Emission Unit ID	Actual Emissions (Tons/Year)					
	NOx	VOC	SO2	PM10	Lead	Other
1-1 (10100201)	**5117**	**55**	**1021**	**244**	**1.0**	
SUBTOTALS	**4000.00**	**55.0**	**1021.0**	**244.0**	**1.0**	

E. Annual Emissions Report for Fee Calculation Purposes -- HAP

Instructions: Use the first table below to identify each HAP meeting the definition of regulated pollutant (for fee calculation) emitted at the facility, identify the CAS number, and assign a unique identifier for use in the second table in this section. When assigning identifier codes, please use "HAP1" for the first, "HAP2" for the second, and so on.

Name of HAP	CAS No.	Identifier
Chromium	**7440-47-3**	**HAP 1**
Manganese	**7439-96-5**	**HAP 2**
Hydrochloric Acid	**7647-01-0**	**HAP 3**
Hydrofluoric Acid	**7664-39-3**	**HAP 4**
Benzene	**71-43-2**	**HAP 5**
		HAP
		HAP
		HAP

Instructions: Use this table to report the actual emissions of each individual HAP identified above. Use the identifiers assigned in the table above to identify each HAP. Include all emissions, including fugitives, but do not include insignificant emissions. Report emissions values to the nearest ton. Sum the emissions in each column and show a subtotal at the bottom of the page. If a subtotal is greater than 4,000 tons, enter 4,000. Submit attachments showing calculations calculations.

This data is for _1999_ (year)

Emissions Unit ID	Actual Emissions (Tons/Year)							
	HAP_1_	HAP_2__	HAP__3_	HAP__4_	HAP_5__	HAP___	HAP___	HAP___
1-1	**3.0**	**4.0**	**45.0**	**11.0**	**1.0**			
SUBTOTALS	**3.0**	**4.0**	**45.0**	**11.0**	**1.0**	_____	_____	_____

F. Fee Calculation Worksheet

Instructions: This section of the form is used to calculate the total fee owed for initial application or annual fee payment purposes. Unless otherwise instructed to proceed to a different line, always proceed to the next line. If you do not need to reconcile estimated against actual emissions, complete the part for emissions calculation (lines 1 - 5) and then proceed to the part for fee calculation (lines 21 - 26). A final permit or permit revision will not be issued until all fees, interest, and penalties assessed against a source are paid. In addition, the initial application for a source will not be found complete unless the source pays all fees owed.

EMISSIONS CALCULATION

1.	Sum the subtotals from section D of this form and enter the result on this line.	5321.0
2.	Sum the subtotals from section E of this form and enter the result on this line.	64.0
3.	Total lines 1 and 2 and enter the result on this line.	5385.0
4.	Sources are not required to pay fees twice for the same emissions [see § 71.9(c)(5)(ii)]. Enter the amount of emissions that were counted twice. Attach supplementary information identifying the emissions units where double counting has occurred and explain why double counting has occurred. If there has been no double counting enter "0."	1.0
5.	Subtract the amount on line 4 from the amount on line 3, round to the nearest ton, and enter the result on this line.	5384

RECONCILIATION OF ESTIMATED EMISSIONS AGAINST ACTUAL EMISSIONS
(WHEN INITIAL ESTIMATES WERE BASED ON THE CURRENT CALENDAR YEAR)

Only complete this part of the worksheet (lines 6 - 10) if you are now preparing the first annual fee worksheet and the initial fee worksheet included estimated emissions for the current calendar year. See §§ 71.9(e)(2) and 71.9(h)(3). Otherwise skip this part of the form and proceed to the next part of the form (starting at line 11) or to the fee calculation part of the form (starting at line 21).

6.	Enter the total estimated emissions previously reported on line 5 of the initial fee calculation worksheet. These are estimated emissions for the year that the initial fee worksheet was submitted.	N/A
7.	If the amount on line 5 of this form is greater than the amount on line 6, subtract line 6 from line 5, and enter the result on this line. Otherwise enter "0."	N/A
8.	If the amount on line 6 is greater than the amount on line 5, subtract line 5 from line 6, and enter the result on this line. Otherwise enter "0."	N/A
9.	Multiply the amount on line 7 by (last year's $/ton amount[1]), and enter the result on this line. This is the amount of underpayment. Go to line 21.	N/A
10.	Multiply the amount on line 8 by (last year's $/ton amount), and enter the result on this line. This is the amount of overpayment. Go to line 21.	N/A

[1] $/ton amounts to be determined at the time of program implementation, see § 71.9(c)(1) - (3).

RECONCILIATION OF ESTIMATED EMISSIONS AGAINST ACTUAL EMISSIONS
(WHEN INITIAL ESTIMATES WERE BASED ON THE PRECEDING CALENDAR YEAR)

Only complete this part of the worksheet (lines 11 - 20) if you are now preparing the first annual fee worksheet and the initial fee worksheet included estimated emissions for the preceding calendar year. See §§ 71.9(f)(2) and 71.9(h)(3). If you must complete this part of the form, you must also submit annual emission reports (sections D and E) for the year preceding initial worksheet submittal. Otherwise skip this part of the form and proceed to the fee calculation part of the form (lines 21 through 26).

11.	Sum the subtotals from section D for the calendar year preceeding initial fee worksheet submittal and enter the result on this line.	N/A
12.	Sum the subtotals from section E for the calendar year preceeding initial fee worksheet submittal and enter the result on this line.	N/A
13.	Total lines 11 and 12 and enter the result on this line. This is the total actual emissions for the calendar year preceding initial fee worksheet submittal.	N/A

RECONCILIATION OF ESTIMATED EMISSIONS AGAINST ACTUAL EMISSIONS
(WHEN INITIAL ESTIMATES WERE BASED ON THE PRECEDING CALENDAR YEAR)
--- CONTINUED ---

14.	Sources are not required to pay fees twice for the same emissions [see § 71.9(c)(5)(ii)]. Enter the amount of emissions (actual emissions for the year preceding initial worksheet submittal) that were counted twice. Attach supplementary information identifying the emissions units where double counting has occurred and explain why double counting has occurred. If there has been no double counting enter "0."	N/A
15.	Subtract the amount on line 14 from the amount on line 13, round to the nearest ton, and enter the result on this line.	N/A
16.	Enter the total estimated emissions previously reported on line 5 of the initial fee calculation worksheet. These are estimated emissions for the calendar year preceding initial fee worksheet submittal.	N/A
17.	If the amount on line 15 is greater than the amount on line 16, subtract line 16 from line 15, and enter the result on this line. Otherwise enter "0."	N/A
18.	If the amount on line 16 is greater than the amount on line 15, subtract line 15 from line 16, and enter the result on this line. Otherwise enter "0."	N/A
19.	Multiply the amount on line 17 by (last year's $/ton amount[1]) and enter the result on this line. This is the amount of underpayment.	N/A
20.	Multiply the amount on line 18 by (last year's $/ton amount) and enter the result on this line. This is the amount of overpayment.	N/A

FEE CALCULATION

21.	Multiply the amount on line 5 on this form by (this year's $/ton amount) and enter the result on this line.	$182086.88
22.	If you have reconciled estimated against actual emissions, enter the underpayment from line 9 or 19 on this line. Otherwise enter "0."	$ 0.00
23.	If you have reconciled estimated against actual emissions, enter the overpayment from line 10 or 20 on this line. Otherwise enter "0."	$ 0.00
24.	If the amount on line 22 is greater than "0," add this amount to the amount on line 21 and enter the result on this line. If the amount on line 23 is greater than "0," subtract this amount from the amount on line 21 and enter the result on this line. Otherwise enter the amount on line 21 on this line. This is the fee adjusted for reconciliation.	$ 182086.88
25.	If your account was credited for fee assessment error [see § 71.9(j)] since the last time you submitted a fee calculation worksheet, enter the amount of the credit on this line. Otherwise enter "0."	$ 0.00
26.	Subtract the amount on line 25 from the amount on line 24 and enter the result on this line. Stop here. This is the total fee amount that you must remit to EPA.	$ 182086.88

PENALTIES AND INTEREST

Payment received later than the due date shall be assessed interest and, in certain cases, penalty charges. If payment is late, do not calculate penalties and interest at this time. The permitting authority will assess these and mail you an invoice.

OMB Control No. 2060-0336, Approval Expires 05-31-2000.

U.S. ENVIRONMENTAL PROTECTION AGENCY
APPLICATION FOR FEDERAL OPERATING PERMIT, 40 CFR PART 71

APPLICATION FORM FF - FEE FILING

Instructions: Complete this form once for the part 71 source (facility) and send it to the appropriate lockbox bank address, along withfull payment. This form required at time of initial, and thereafter, annual fee payment.

A. Source or Facility Name: **Bonanza Unit I**

B. Mailing Address and Contact Person:

Street or P.O. Box: **10714 South Jordan Gateway, Suite 300**

City: **South Jordan** State: **UT** ZIP: **84095**

Contact Person: **Howard Vickers** Title: **Environmental Supervisor**

Telephone: **(435)781-5706**

C. Total Fee Payment Remitted: **$ 182086.88**

Deseret

10714 South Jordan Gateway • South Jordan, Utah 84095
Phone 801-619-6500 • FAX 801-619-6599

GENERAL ACCOUNT

MURRAY OFFICE
ZIONS FIRST NATIONAL BANK
MURRAY, UTAH
31-5/1240

DATE	CHECK NO.	CHECK AMOUNT
3/16/2000	61538	182,086.88

PAY ONE HUNDRED EIGHTY TWO THOUSAND EIGHTY SIX DOLLARS AND 88/100

DESERET GENERATION & TRANSMISSION CO-OPERATIVE

TO THE ORDER OF
U.S. ENVIRONMENTAL PROTECTION AGENCY
MELLON BANK
ATTN: PART 71 PERMIT ACCOUNTING
LOCKBOX 360859
PITTSBURGH, PA 15251-6859

NOT VALID 60 DAYS AFTER DATE OF ISSUE

⑈061538⑈ ⑆124000054⑆ 15 00426 0⑈

DESERET GENERATION & TRANSMISSION CO-OPERATIVE

INVOICE NUMBER	INVOICE DATE	INVOICE AMOUNT	P.O. NUMBER	CO. ACCT. SUB.	COST CODE	AMOUNT
EMMISSION FEES FOR THE TITLE V program year 2000						
		182,086.88				

CHECK DATE	CHECK NUMBER	CHECK AMOUNT
3/16/2000	61538	182,086.8

LIST OF APPENDICES

Appendix A: Site Plan

Appendix B: Process Flow Diagram

Appendix C: Description of Process and Equipment

Appendix D: Description of All Potential Emissions

Appendix E: List and Description of Any Insignificant Emission Units

Appendix F: List of All Air Pollution Control Equipment

Appendix G: List and Description of All Compliance Monitoring Equipment and EPA Test Methods Used

Appendix H: List and Description of All Applicable Requirements

Appendix I: List of Exemptions Requested

Appendix J: Emissions Trading Information

Appendix K: Compliance Plan and Schedule

Appendix L: Compliance Certification

Appendix M: Acid Rain Provisions

A

Appendix A

Site Plan

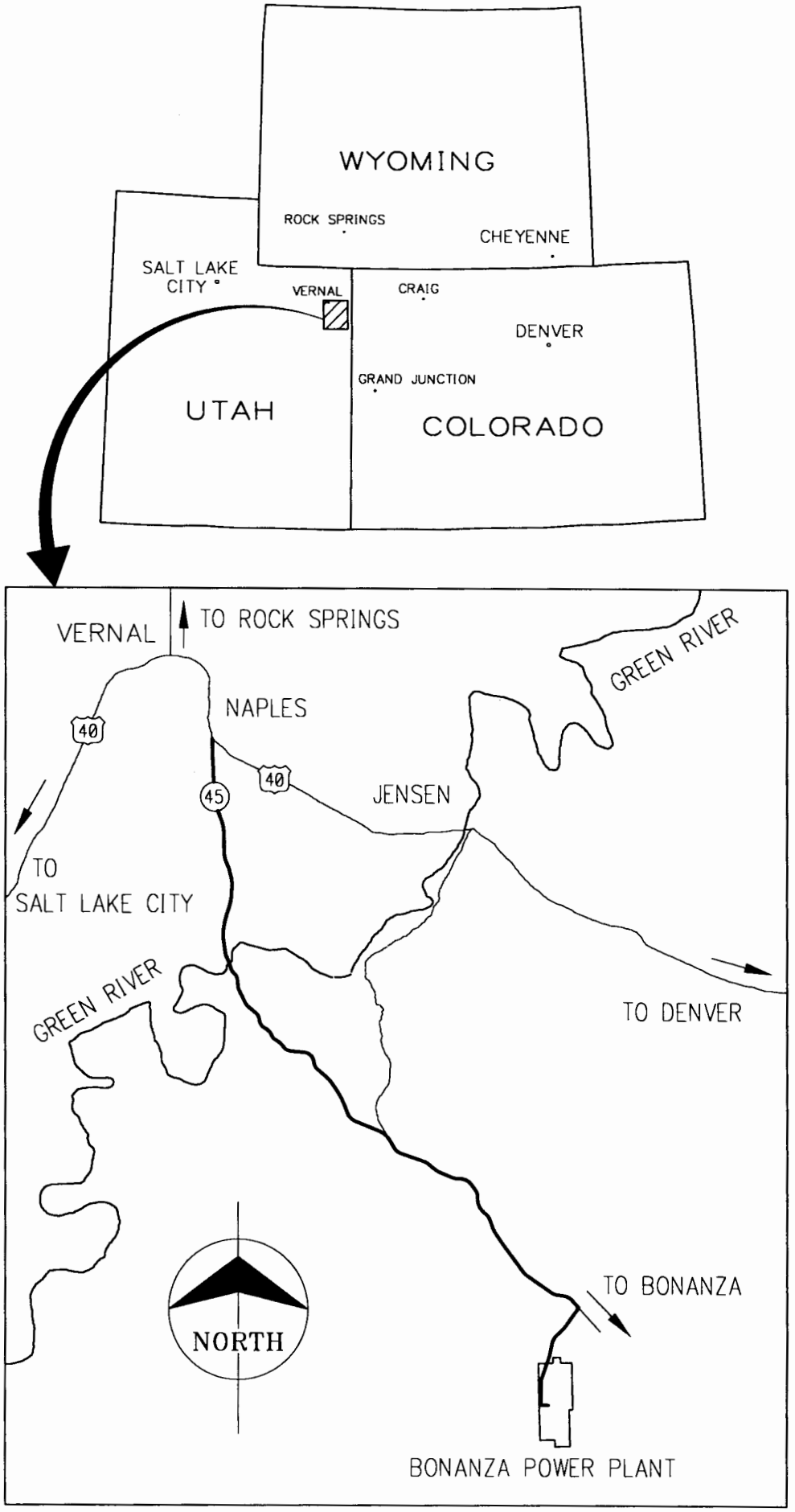
WYOMING
ROCK SPRINGS
CHEYENNE
SALT LAKE CITY
VERNAL
CRAIG
DENVER
GRAND JUNCTION
UTAH
COLORADO
VERNAL
TO ROCK SPRINGS
GREEN RIVER
NAPLES
40
40
45
JENSEN
TO SALT LAKE CITY
GREEN RIVER
TO DENVER
NORTH
TO BONANZA
BONANZA POWER PLANT

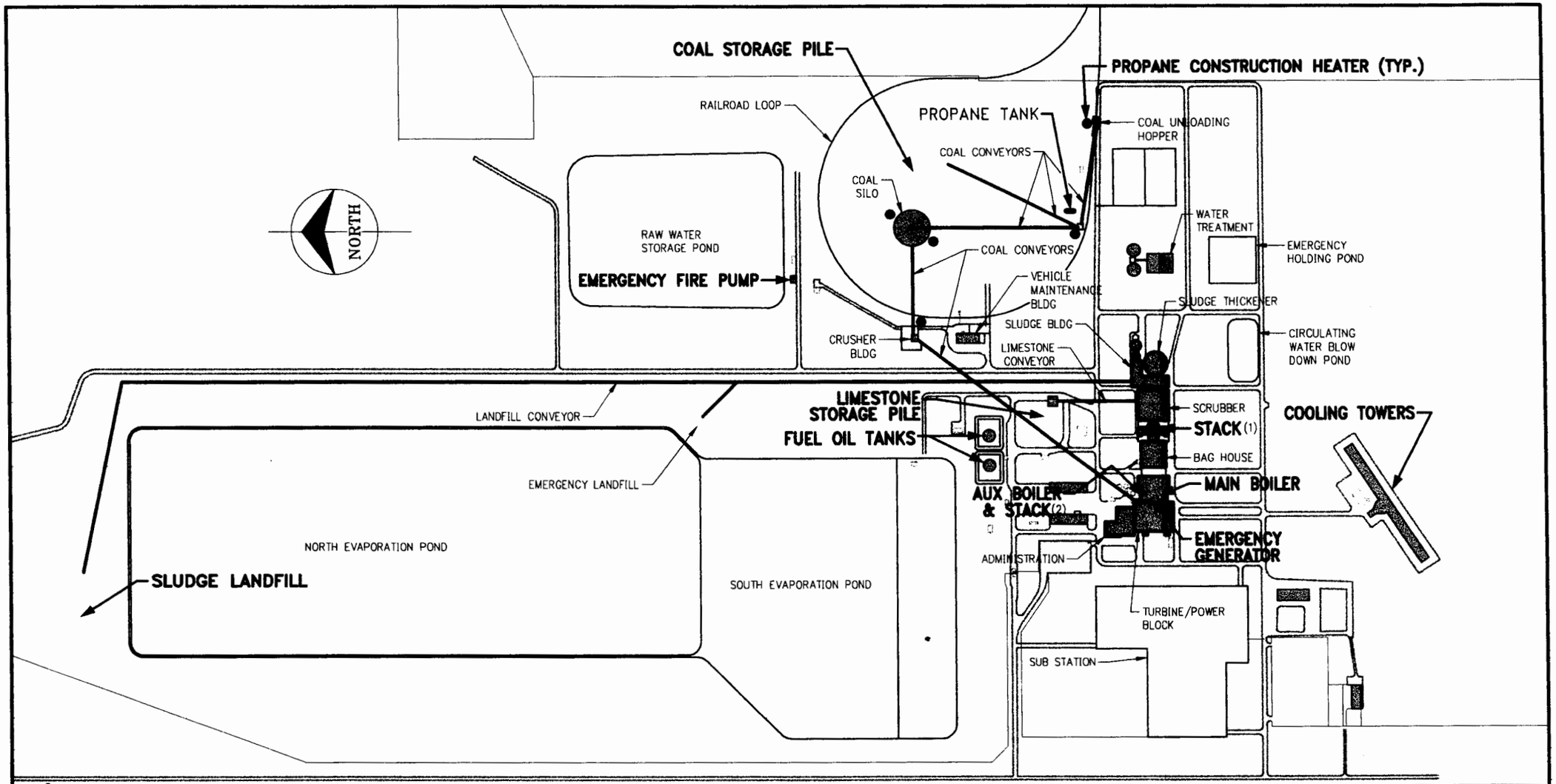

Deseret Generation & Transmission Co-operative

TITLE: BONANZA POWER PLANT

					ENG	BY	DATE	DRAFT	BY	DATE	W.O. No. 9504192	
					ENG	MG	11/95	DRAWN	KBS	11/95	DWG. No. A-2	SHEET 1 OF 1
1	W.O. 9504192	11/95	KBS	MG	APVD			CHK	MG	11/95		REV. 1
No.	REVISIONS	DATE	BY	APVD	PLOT SCALE: NO SCALE			APVD				

CAD FILE NAME: TTL5_A2.DWG

PLANT STACK PARAMETERS

Bonanza Power Plant Stack Parameters:

Stack 1. The plant's main stack is 604 feet high. It is constructed with a concrete shell and acid resistant brick liner. The exit diameter is 26 feet with an average exit temperature of about 120^0 F. The stack flow rate currently runs about 1,160,000 SCFM at full load based on testing performed on September 9, 1999. The stack flow rate is expected to increase to about 1,300,000 SCFM when the new ruggedized rotor is installed and operating. The outlet Continuous Emission Monitoring system probe and associated probe equipment is located at the 320 foot level of the stack.

Stack 2. The Auxiliary Boiler stack is located in the Main Boiler building and extends through the roof. It is 240 feet high and has an exit diameter of 4.75 feet. The average exit temperature is 600^0 F when the unit is in operation. The stack flow rate is 1,000 SCFM estimated.

Plant Location:

The Bonanza Power Plant is located 28 miles (45 Km) Southeast of Vernal, Utah along State Highway 45. 7.5 miles (12 Km) Northwest of Bonanza, Utah. UTM Coordinates are 4,438,606 m Northing 646,206 m Easting. Latitude W 109^0 17.480' Longitude N 40^0 04.940'.

B

Appendix B

Process Flow Diagram

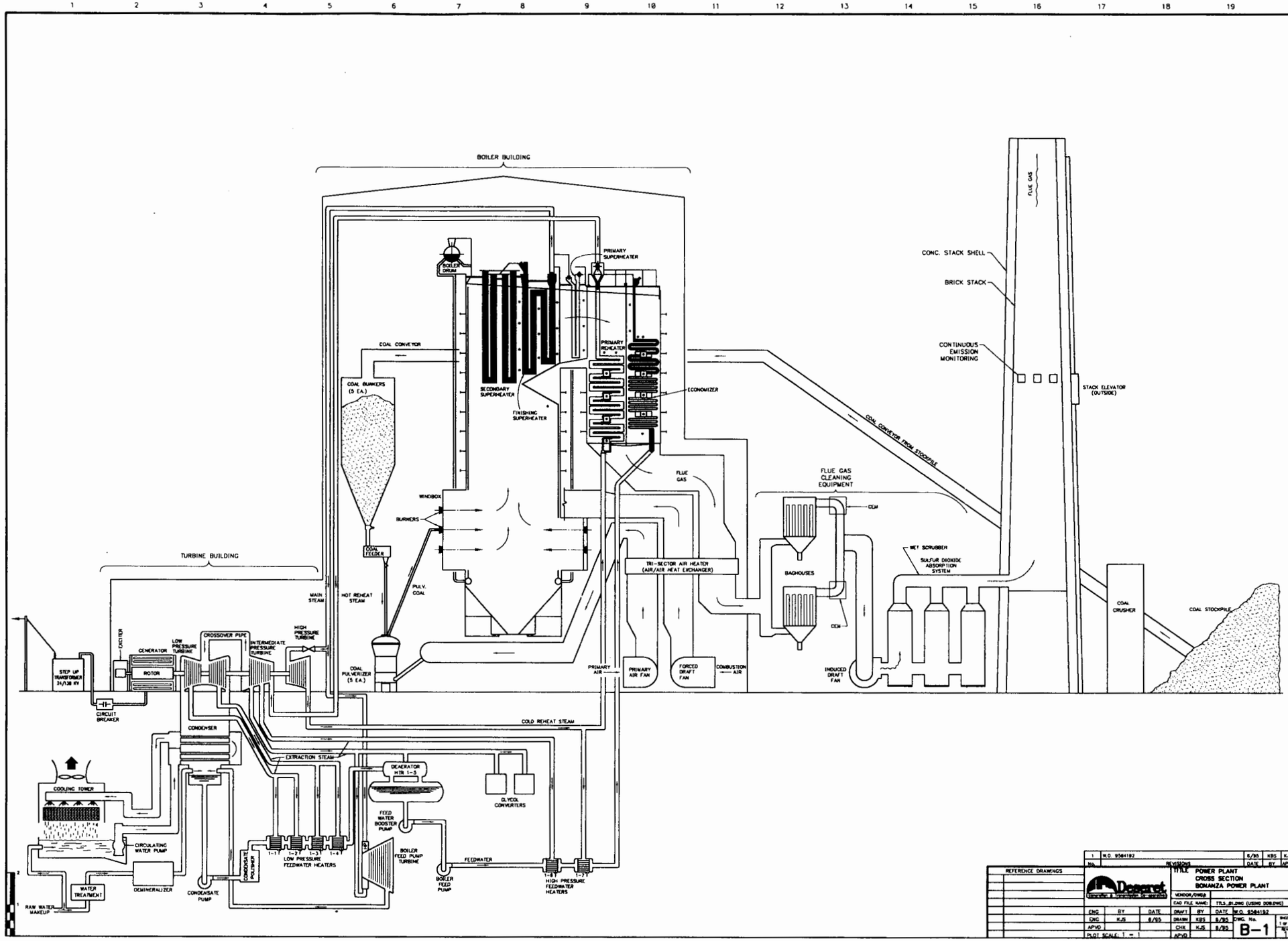
BOILER BUILDING
TURBINE BUILDING
BOILER DRUM
PRIMARY SUPERHEATER
PRIMARY REHEATER
SECONDARY SUPERHEATER
FINISHING SUPERHEATER
ECONOMIZER
COAL CONVEYOR
COAL BUNKERS (5 EA.)
COAL FEEDER
WINDBOX
BURNERS
PULV. COAL
COAL PULVERIZER (5 EA.)
HOT REHEAT STEAM
MAIN STEAM
FLUE GAS
TRI-SECTOR AIR HEATER (AIR/AIR HEAT EXCHANGER)
PRIMARY AIR
PRIMARY AIR FAN
FORCED DRAFT FAN
COMBUSTION AIR
FLUE GAS CLEANING EQUIPMENT
CEM
BAGHOUSES
WET SCRUBBER
SULFUR DIOXIDE ABSORPTION SYSTEM
INDUCED DRAFT FAN
FLUE GAS
CONC. STACK SHELL
BRICK STACK
CONTINUOUS EMISSION MONITORING
STACK ELEVATOR (OUTSIDE)
COAL CONVEYOR FROM STOCKPILE
COAL CRUSHER
COAL STOCKPILE
STEP UP TRANSFORMER 24/138 KV
CIRCUIT BREAKER
ROTOR
EXCITER
GENERATOR
LOW PRESSURE TURBINE
CROSSOVER PIPE
INTERMEDIATE PRESSURE TURBINE
HIGH PRESSURE TURBINE
CONDENSER
COLD REHEAT STEAM
EXTRACTION STEAM
DEAERATOR HTR 1-5
GLYCOL CONWATERS
FEED WATER BOOSTER PUMP
BOILER FEED PUMP TURBINE
FEEDWATER
BOILER FEED PUMP
1-8Y
1-7Y
HIGH PRESSURE FEEDWATER HEATERS
1-1Y
1-2Y
1-3
1-4
LOW PRESSURE FEEDWATER HEATERS
CONDENSATE POLISHER
CONDENSATE PUMP
DEMINERALIZER
WATER TREATMENT
RAW WATER MAKEUP
CIRCULATING WATER PUMP
COOLING TOWER
REFERENCE DRAWINGS
REVISIONS
NO. | DATE | BY | APVD
1 | W.O. 9364192 | 8/95 | KBS | KJS
TITLE POWER PLANT CROSS SECTION BONANZA POWER PLANT
VENDOR/DWG#
CAD FILE NAME: TTLS_BLDNG (USING DOBLDWG)
ENG BY DATE
DRAFT BY DATE
DRAWN KBS 8/95
CHK KJS 8/95
APVD
ENG KJS 8/95
APVD
PLOT SCALE: 1 = 1
W.O. 9364192
DWG. No. B-1
SHEET 1 OF 1 REV 1

GENERAL PROCESS FLOW DIAGRAM

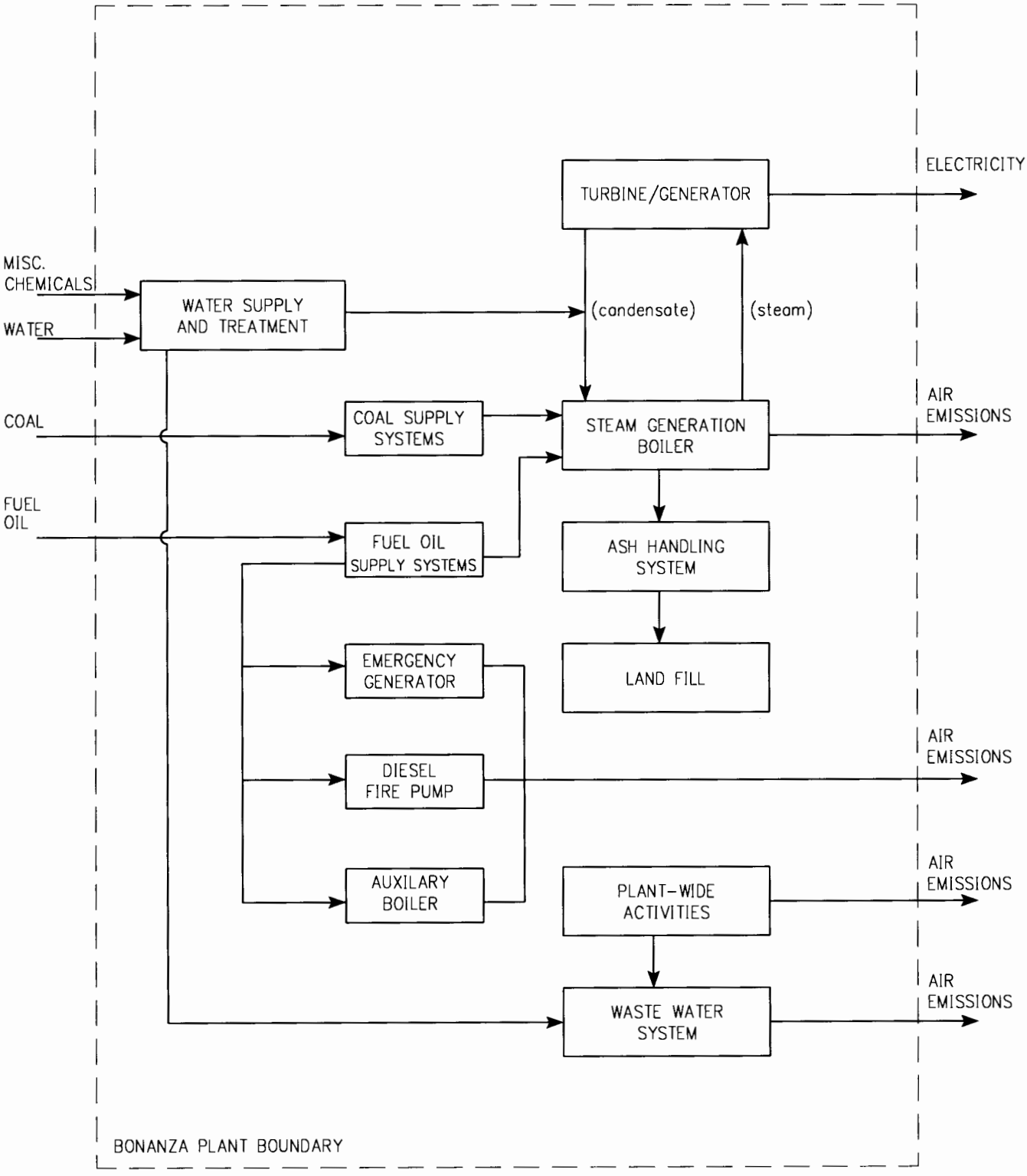

STEAM GENERATION AND ASH HANDLING EMISSION UNIT IDENTIFICATION

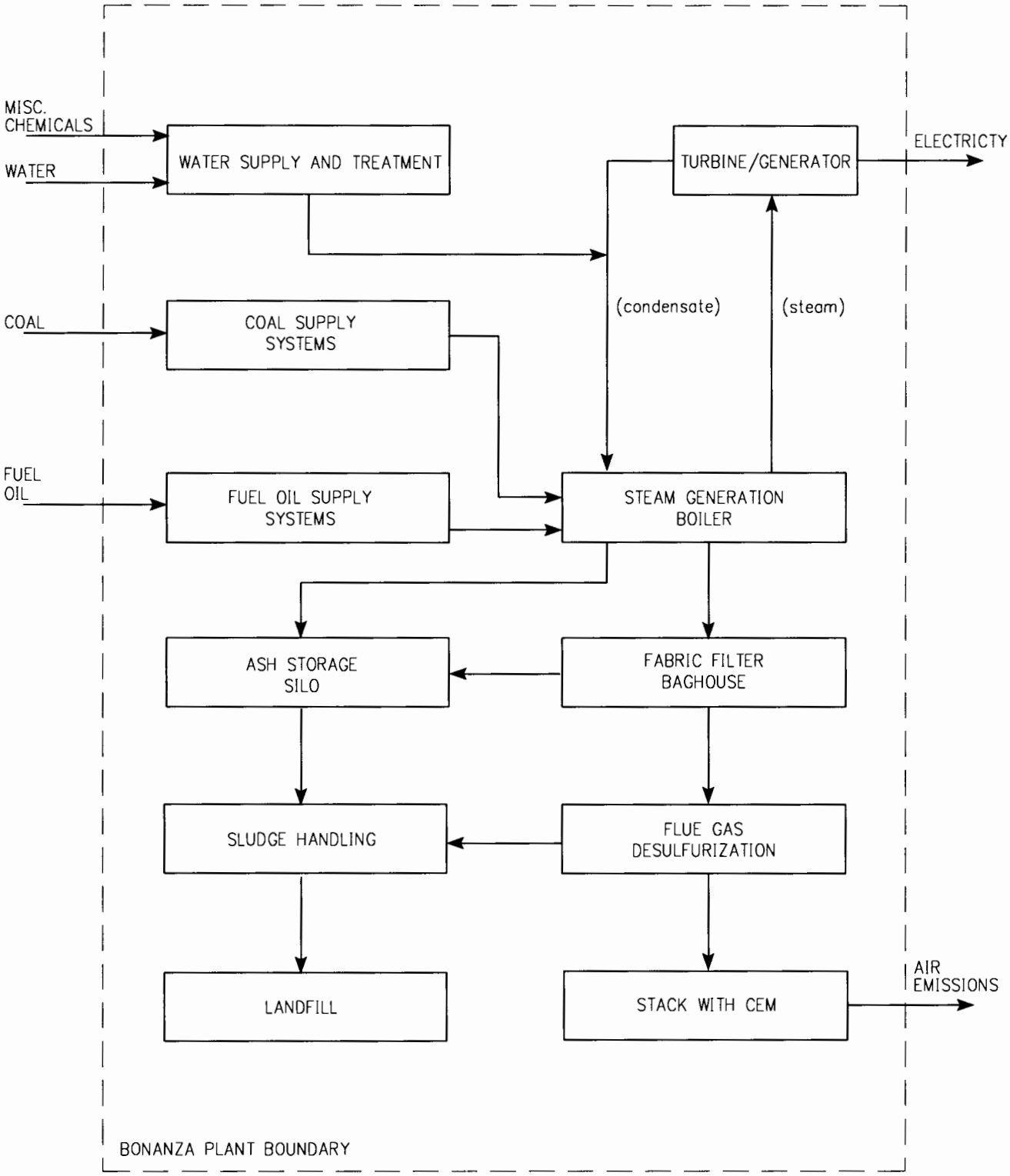

FUEL SUPPLY SYSTEM–COAL HANDLING EMISSION UNIT IDENTIFICATION

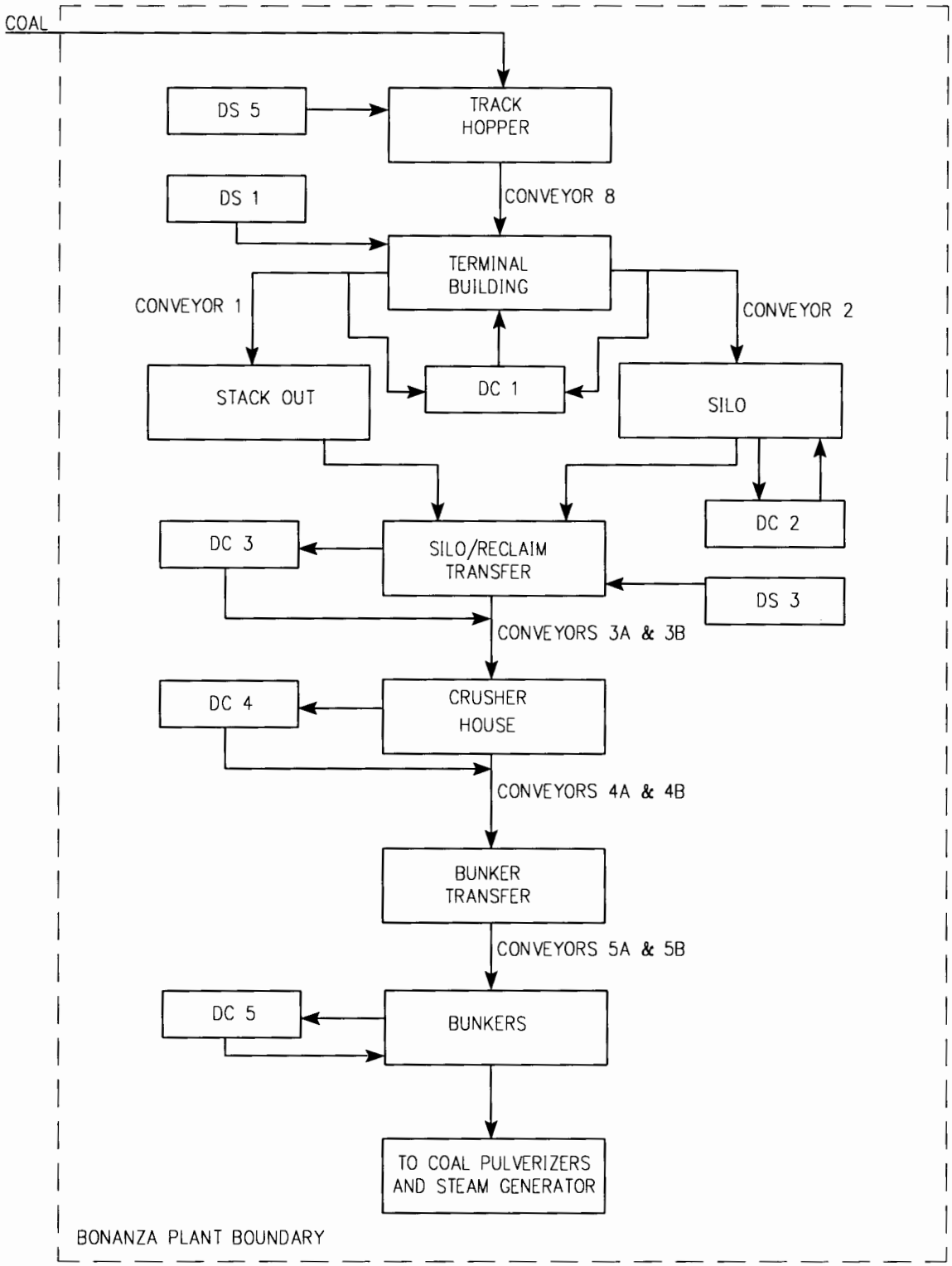

LEGEND

BCV - BLOW BACK/CAL VALVE
CA# - CLEAN AIR VALVE
CG# - CALIBRATION GAS NUMBER
CV - CHECK VALVE
CV# - CHECK VALVE NUMBER
RV# - REGULATOR VALVE
PS# - SUPERVISORY PRESSURE SWITCH
FCV - FAST CAL VALVE
CS# - CAL SUPPLY VALVE
FLT - INLINE FILTER (0.5 MICRON)
ABV - AIR BLOCKING VALVE
MPC - MAXIMUM POTENTIAL CONCENTRATION
MEC - MAXIMUM EXPECTED CONCENTRATION

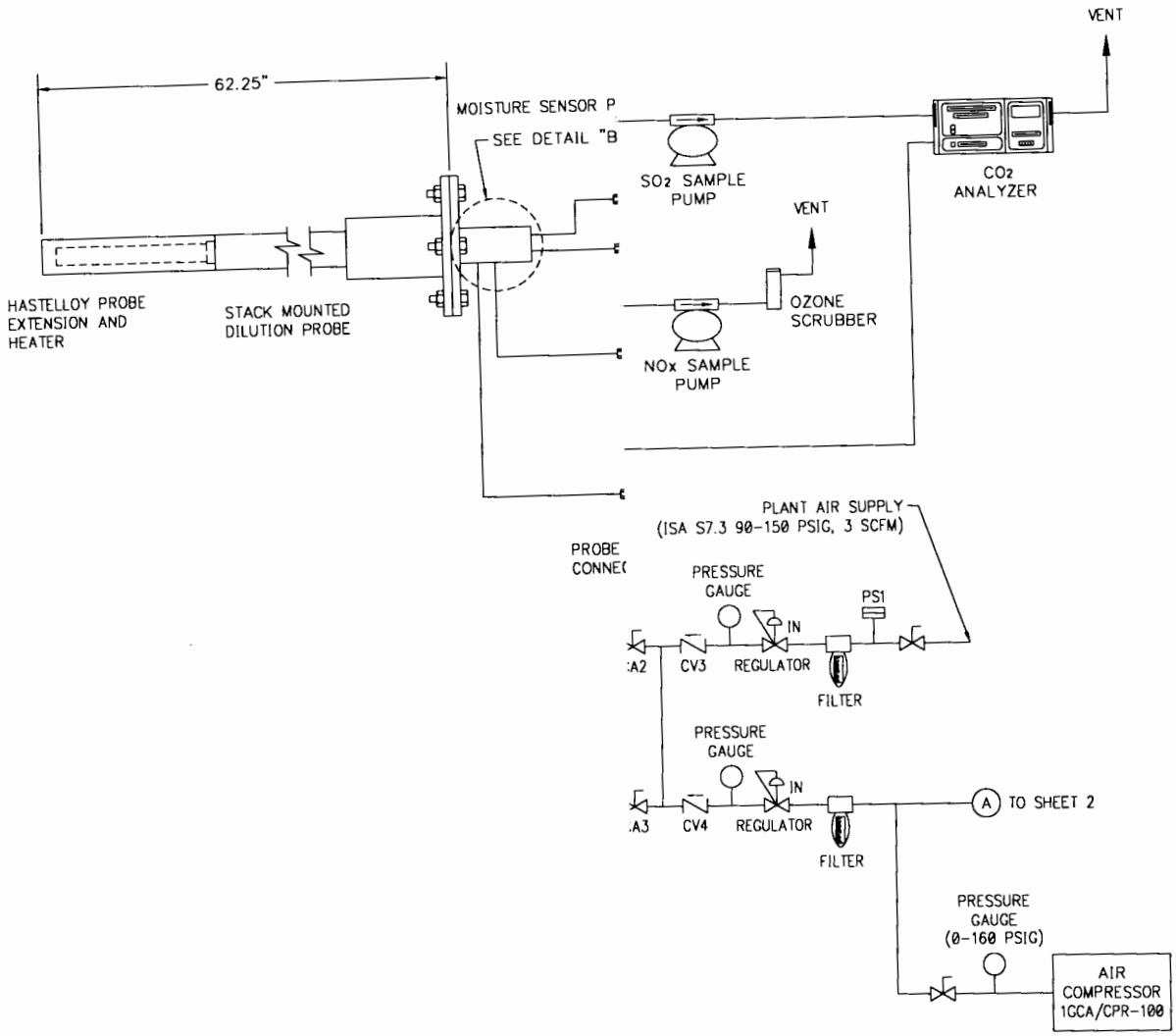

NOTES:

1. DAILY CAL DRIFT GAS NITROGEN BALANCE
2. HIGH RANGE SO2 SPAN = 700 PPM
3. HIGH RANGE SO2 F.S. = 1000 PPM
4. LOW RANGE SO2 SPAN = 40 PPM
5. LOW RANGE SO2 F.S. = 50 PPM
6. NOx SPAN = 500 PPM
7. NOx F.S. = 500 PPM
8. CO2 SPAN = 20%
9. CO2 F.S. = 20%
10. DILUTION RATIO = 100:1 TYP. 3 PLACES
11. SO2 MPC = 515
12. SO2 MEC = 32

No.	REVISIONS	DATE	BY	APVD
0	INTERNAL REVIEW	12/95	KBS	MG

RAWINGS

Deseret Generation & Transmission Co-operative

TITLE
CEM SYSTEM SCHEMATIC
STACK PIPING
BONANZA POWER PLANT

VENDOR/DWG#: SPECTRUM SYSTEMS INC / DE03
CAD FILE NAME: TTL5_B5.DWG

ENG	BY	DATE	DRAFT	BY	DATE	W.O. No.
ENG	MG	12/95	DRAWN	KBS	12/95	DWG. No.
APVD			CHK	MG	12/95	
PLOT SCALE: 1=1			APVD			

DWG. No. B-5
SHEET 1 OF 2
REV. 0

LEGEND

BCV - BLOW BACK/CAL VALVE
CA# - CLEAN AIR VALVE
CG# - CALIBRATION GAS NUMBER
CV - CHECK VALVE
CV# - CHECK VALVE NUMBER
RV# - REGULATOR VALVE
PS# - SUPERVISORY PRESSURE SWITCH
FCV - FAST CAL VALVE
CS# - CAL SUPPLY VALVE
FLT - INLINE FILTER (0.5 MICRON)
ABV - AIR BLOCKING VALVE
MPC - MAXIMUM POTENTIAL CONCENTRATION
MEC - MAXIMUM EXPECTED CONCENTRATION

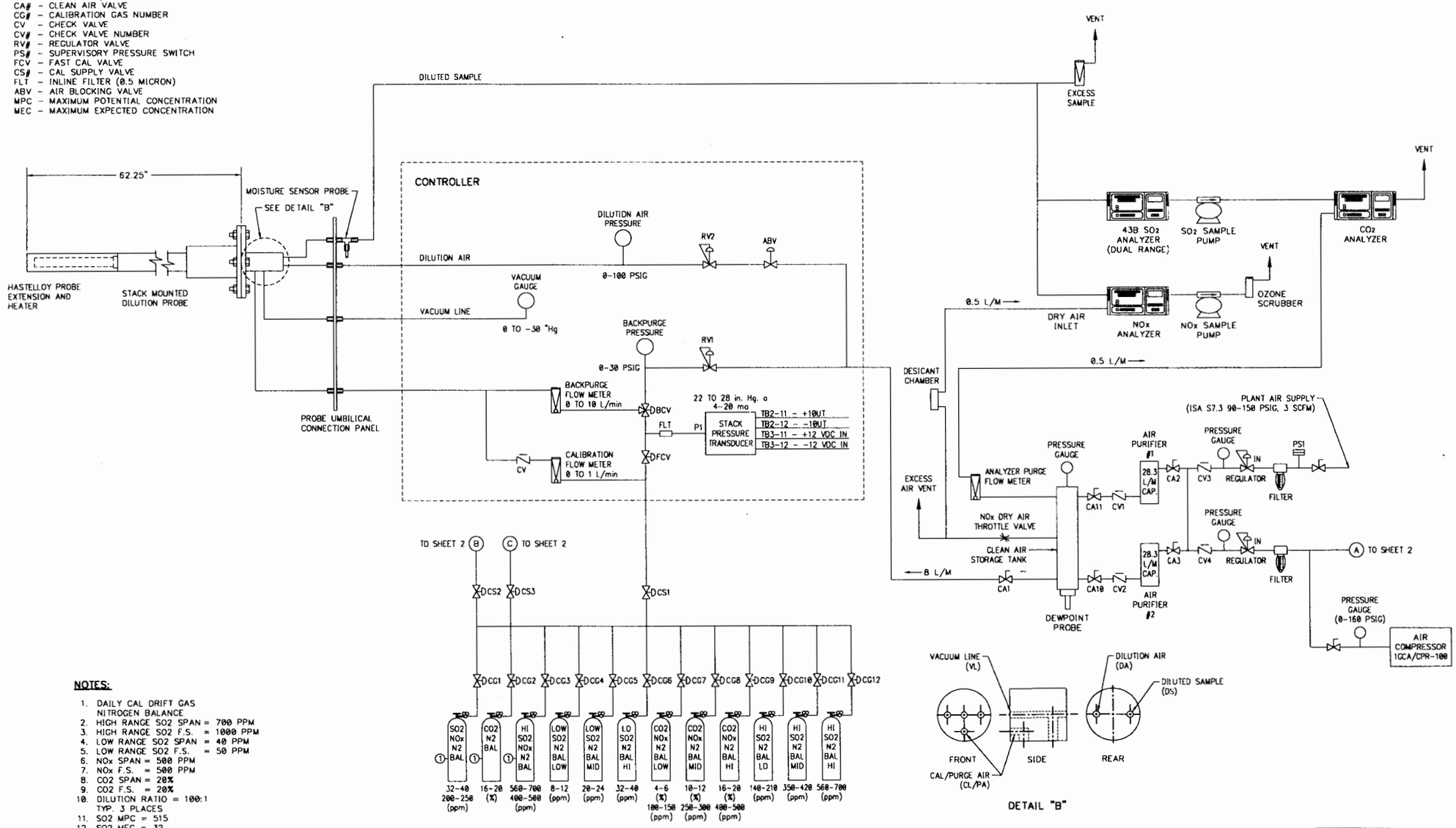

NOTES:

1. DAILY CAL DRIFT GAS NITROGEN BALANCE
2. HIGH RANGE SO2 SPAN = 700 PPM
3. HIGH RANGE SO2 F.S. = 1000 PPM
4. LOW RANGE SO2 SPAN = 40 PPM
5. LOW RANGE SO2 F.S. = 50 PPM
6. NOx SPAN = 500 PPM
7. NOx F.S. = 500 PPM
8. CO2 SPAN = 20%
9. CO2 F.S. = 20%
10. DILUTION RATIO = 100:1 TYP. 3 PLACES
11. SO2 MPC = 515
12. SO2 MEC = 32

No.	REVISIONS	DATE	BY	APVD
0	INTERNAL REVIEW	12/95	KBS	MG

REFERENCE DRAWINGS

Deseret Generation & Transmission Co-operative

TITLE
CEM SYSTEM SCHEMATIC
STACK PIPING
BONANZA POWER PLANT

VENDOR/DWG#: SPECTRUM SYSTEMS INC / DE63
CAD FILE NAME: TTL5_B5.DWG

	BY	DATE
ENG		
ENG	MG	12/95
APVD		

PLOT SCALE: 1=1

	BY	DATE
DRAFT		
DRAWN	KBS	12/95
CHK	MG	12/95
APVD		

W.O. No.
DWG. No. B-5
SHEET 1 of 2
REV. 0

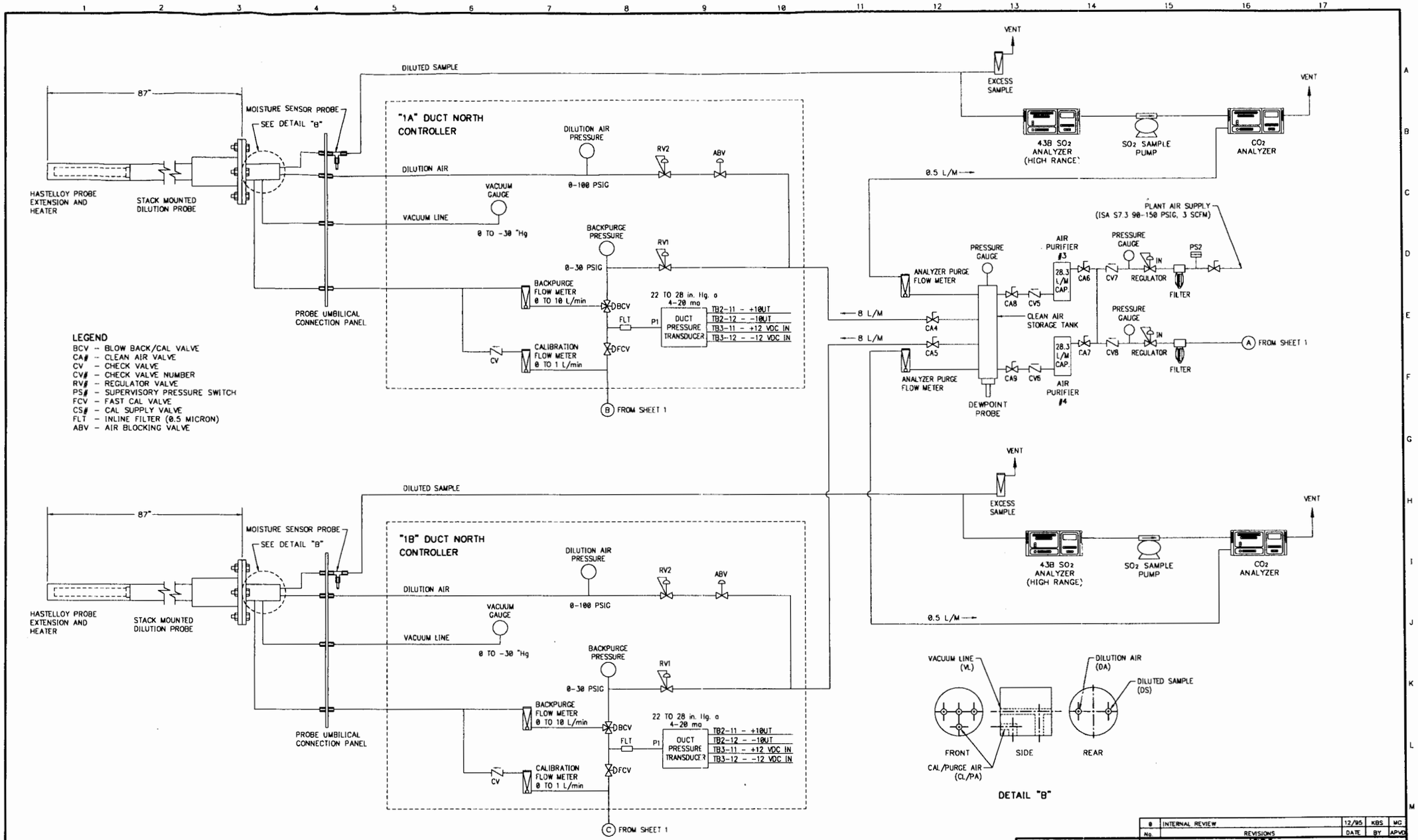

No.	REVISIONS	DATE	BY	APVD
0	INTERNAL REVIEW	12/95	KBS	MG

REFERENCE DRAWINGS

Deseret Generation & Transmission Co-operative

TITLE
CEM SYSTEM SCHEMATIC
STACK PIPING
BONANZA POWER PLANT

VENDOR/DWG#: SPECTRUM SYSTEMS INC / DE03
CAD FILE NAME: TTL5_B6.DWG

	BY	DATE
ENG		
ENG	MG	12/95
APVD		

PLOT SCALE: 1=1

	BY	DATE
DRAFT		
DRAWN	KBS	12/95
CHK	MG	12/95
APVD		

W.O. No.
DWG. No. B-6
SHEET 2 OF 2
REV. 0

C

Appendix C

Description of Process and Equipment

PROCESS AND EQUIPMENT DESCRIPTION

General Plant Description:

The Bonanza Power Plant is a 500 est. Megawatt, coal fired generating facility. It consists of a Foster Wheeler Steam Generator capable of producing over 3,200,000 lbs of steam an hour. The Turbine Generator is a Westinghouse tandem compound two flow reheat unit. Water for the unit is transported approximately twenty miles from the Green River near Jensen, Utah. Coal for the unit is mined in Colorado near Rangley, at the Co-operatives Deserado mine and transported via an electric railroad thirty five miles to the plant site. Occasionally, as needed, coal is also purchased on the open market and trucked to the site. The project was originally developed for two generating units, however due to the downturn of the petroleum industry in the late 1980's the development of the second unit has been postponed. Most of the power produced is transported to Southern California, with the remainder supplying the Co-operative's members in Utah and surrounding states or sold on the open market.

Fuel Systems:

Currently, bituminous low sulfur coal is the primary fuel source for the plant. The coal is pulverized to the consistency of talcum powder and fired into the boiler. The unit at full load burns about 229 tons of coal per hour and 5496 tons of coal every 24 hours. Low NOx burners are used in the boiler for NOx emission control. Currently, fuel oil is used to start up the Main Boiler from a cold start and to change pulverizing equipment on line. Fuel Oil is also currently used to operate the Auxiliary Boiler during shutdowns and for cold unit starts. Natural gas may be used for firing these boilers in the future as economics dictate.

Fuel Oil is used to operate the plant's Emergency Diesel Generator and the Emergency Diesel Fire pump. Fuel Oil is stored in two 288,000 gallon tanks on site. Diesel refueling is performed on site for heavy equipment via a 2,000 gallon tank.

Propane is used to heat outlying Coal Handling buildings via Construction Heaters. The Propane storage tank holds 30,000 gallons.

A Gasoline refueling station using a 2,000 gallon storage tank is also on the plant site for smaller vehicles.

Turbine Generator System:

The Turbine Generator uses steam at $1,005^0$ F. and 2,485 psi produced by the boiler to generate electricity. The Turbine Generator uses a lube oil system which includes a main reservoir, clean and dirty storage tanks, pumps and filters

The generating process involves converting mechanical energy to electrical energy supplying the plant site and for sales on the Western grid.

APPENDIX C
PROCESS AND EQUIPMENT DESCRIPTION

Steam Generator System:

Coal is pulverized and fed into the Boiler via hot air streams to produce the steam needed for energy demands. Coal usage and steam production vary with energy needs. Fuel Oil is used in the ignitors to support starting and stopping of the coal pulverizing equipment and for flame stabilization during transients. Fuel Oil is also used for start up steam production in a unit cold start.

Auxiliary steam is produced by the package boiler for unit cold starts or supplemental heating during unit outages. The package boiler uses Fuel Oil and is rated at 150,000 lbs of steam an hour at 150 psi.

Pollution Control Systems:

The Bonanza Power Plant uses an Ecolaire Baghouse and ABB Wet Scrubber along with the Low Nox Burners for pollution control. The Baghouse is a reverse gas design using not only reverse gas but sonic horns for bag cleaning. There are a total of 10,800 bags in the unit with an average DP of 5.5 inches of water. Gas flow at full load through the Baghouse and Scrubber is approximately 1,160,000 SCFM.

The Scrubber consists of three absorber modules, two of which are on line any time the plant is in service with the third module being a spare. Each absorber module uses three levels of counter flow slurry sprays at 12, 000 GPM to react with the flue gas. The spray is collected on a tray which forces the gas through 1.5" diameter holes. This not only straightens the gas flow but provides a 100% contact between the gas and the slurry. Limestone is ground on site in Ball Mills and mixed with water to a density of 35% to produce the needed slurry. The slurry is mixed into the Absorber Modules to maintain a module density of 13% and a Ph of 5.7. Continuous Emission Monitoring is performed on each Absorber inlet duct and outlet at the 320' level of the stack. Reference drawings in Appendix B and the description in Appendix G.

Water Supply System:

Water is transported approximately twenty miles from the Co-operatives wells along the Green River. The system discharges through a maximum 450 Kw Hydro-Generator into the Raw Water Storage pond on site prior to treatment. The system has a capability of transporting at least 13, 000 GPM.

Boiler Feedwater must be extremely clean and demineralized prior to use, all treatment is performed on site. Two stages of cleaning occur, the first in the Water Treatment facility where boiler water goes through a Reverse Osmosis process. The second in the Turbine building where boiler water is then Demineralized. The recirculation of the plants condensate is also constantly Polished to maintain strict compliance with boiler chemistry.

APPENDIX C
PROCESS AND EQUIPMENT DESCRIPTION

Due to the remote location of the plant the Co-operative also produces Potable Water on site. All Potable Water systems are operated in accordance with federal and State of Utah regulations.

The Bonanza Power Plant is a Zero Discharge facility. All waste water and storm water is collected and re-used where possible. All remaining water is sent to the evaporation ponds where it is impounded.

Reference Appendix D for individual equipment and system process flows, along with Appendix A and B for unit drawings.

D

Appendix D

Description of All Potential Emissions

APPENDIX D
DESCRIPTION OF POTENTIAL EMISSIONS

Description of all Potential Emissions

The Bonanza Power Plant is Major Source for Potential Emissions of **Nitrogen Oxides, Sulfur Dioxide, Total Particulates, PM-10, VOC's, HAPS** and **Carbon Monoxide**. Potential emissions of all other regulated pollutants are calculated to be less than the Major Source threshold definition.

Process Data calculation sheets follow to summarize information used to calculate potential emissions. Potential to emit was based on 99% of the coal burned in the boiler controlled and 0% of the oil burned in the boiler as controlled.

Bonanza Power Plant Major Source Potential Emissions

NO_x:

1. Main Boiler (coal)	10025.8 TPY	Reference D-1
2. Main Boiler (Natural Gas	282.1 TPY	Reference D-13

SO_2:

1. Main Boiler (coal)	2343.7 TPY	Reference D-1

CO:

1. Main Boiler (coal)	501.3 TPY	Reference D-1
2. Main Boiler (Natural Gas	1692.4 TPY	Reference D-13

PM:

1. Main Boiler (coal)	2394.5 TPY	Reference D-1
2. Main Boiler (Natural Gas)	153.1 TPY	Reference D-13

APPENDIX D
DESCRIPTION OF POTENTIAL EMISSIONS

PM_{10}:

1. Main Boiler (coal)	2372.5 TPY	Reference D-1
2. Main Boiler (Natural Gas)	153.1 TPY	Reference D-13

VOC:

1. Main Boiler (coal)	70.2 TPY	Reference D-1
2. Main Boiler (Natural Gas)	110.8 TPY	Reference D-13

HAPs:

1. Main Boiler (coal)	87.0 TPY	Reference D-1, D-2, D-3
2. Main Boiler (Natural Gas)	273.5 TPY	Reference D-13, D-14, D-15

DESERET GENERATION AND TRANSMISSION COOPERATIVE

PLANT: **Bonanza, Unit 1**
SOURCE ID: Main Boiler
FUEL: Bituminous Coal (p. 1 of 3)

PROCESS DATA

YEAR: 2000 SCC CODE	DESIGN OUTPUT (kW) (est)	HEAT INPUT (MMBTU/HR)	CALCULATED HEATRATE (Btu/kWh)	PROCESS RATE	SCC UNITS	DESIGN RATE (SCC UNIT/HR)	SULFUR CONTENT (% BY WEIGHT)	ASH CONTENT (% BY WEIGHT)	FUEL HEAT CONTENT (MMBTU/SCC UNIT)
10100201	500	4,578	9,156	2,005,164	TON	228.90	1.000	9.00	20.00

ESTIMATED EMISSIONS

POLLUTANT	CONTROL EQUIPMENT PRIMARY	CONTROL EQUIPMENT SECONDARY	CONTROL EFFICIENCY (%)	EMISSION FACTOR (LBS/SCC UNIT)	ASH/SULFUR FLAG	EMISSIONS ESTIMATION METHOD		POTENTIAL TO EMIT (TONS/YEAR)
CO			0.00	0.50		FIRE 6.22 lbs/ton		501.29
VOC			0.00	0.07		Section 1.1, Sup E AP-42		70.18
NOx	Low NOx Burners		0.00	Controlled 10.00		Emission Limit (0.50 lbs/MMBtu)		10,025.82
SO2	Scrubber		2.0 #/MMBtu Max inlet 95.12	40.00	S	Emission Limit 0.0976 lbs/MMbtu		2,338.50
PM	Baghouse	Scrubber	(CALCULATED) 99.67	180.00	A	Emission Limit (.0297 lbs/MMBtu)		2,394.23
PM10	Baghouse	Scrubber	(CALCULATED) 99.68	180.00	A	Emission Limit (.0286lbs/MMBtu)		2,372.39
Lead	Baghouse	Scrubber	(AIR TOXICS) 95.00	(.0008 #/MMBtu) 0.0160		Coal Analysis (11/1998) 8 PPM		0.95
Arsenic	Scrubber	Baghouse	(AIR TOXICS) 94.30	(.000538 #/MMBtu) 0.0108		FIRE 6.22		0.72
Beryllium	Baghouse		(AIR TOXICS) 99.30	(.000081 #/MMBTU) 0.0000		FIRE 6.22		0.00
Cadmium	Baghouse		Stack Test 99.80	(.000044 #/MMBTU) 0.0000		FIRE 6.22		0.00
Chromium	Scrubber	Baghouse	(AIR TOXICS) 71.50	(0.0007 #/MMBtu) 0.0140		Coal Analysis (11/1998) 7 PPM		4.10
Mercury	Scrubber	Baghouse	(AIR TOXICS) 25.00	(.000016 #/MMBtu) 0.0003		FIRE 6.22		0.24
Manganese	Baghouse		(AIR TOXICS) 78.50	(.0011 #/MMBtu) 0.0220		Coal Analysis (11/1998) 11 PPM		4.92
Nickel	Scrubber		(AIR TOXICS) 72.70	(.0001 #/MMBtu) 0.0020		Coal Analysis (11/1998) <1.0 PPM		0.56
Selenium	Baghouse		(XATEF1) 92.00	(24.34 lbs/10^12 Btu) 0.0005		AIR TOXICS (for bitum coal)		0.04
POM	Baghouse		Unknown; factor w/ control	(18.5 lbs/10^12 Btu) 0.0004		AIR TOXICS (for bitum coal)		0.3710
HCL	Scrubber		97.00%	1.90				57.1472

DESERET GENERATION AND TRANSMISSION COOPERATIVE

PLANT: **Bonanza, Unit 1**
SOURCE ID: Main Boiler
FUEL: Bituminous Coal (p. 2 of 3)

HF	Scrubber		94.00%	0.23		Coal Analysis (11/1998) lbs/ton		13.8356
Acetaldehyde			0.00	5.70E-04		EPA 745-B-97-016 lbs/ton		0.5715
Acetophenone			0.00	1.50E-05		EPA 745-B-97-016 lbs/ton		0.0150
Acrolein			0.00	2.90E-04		EPA 745-B-97-016 lbs/ton		0.2907
Benzene			0.00	1.30E-03		EPA 745-B-97-016 lbs/ton		1.3034
Benzyl Chloride			0.00	7.00E-04		EPA 745-B-97-016 lbs/ton		0.7018
Bromoform			0.00	3.90E-05		EPA 745-B-97-016 lbs/ton		0.0391
Carbon Disulfide			0.00	1.30E-04		EPA 745-B-97-016 lbs/ton		0.1303
2-Chloroacetophenone			0.00	7.00E-06		EPA 745-B-97-016 lbs/ton		0.0070
Chlorobenzene			0.00	2.20E-05		EPA 745-B-97-016 lbs/ton		0.0221
Chloroform			0.00	5.90E-05		EPA 745-B-97-016 lbs/ton		0.0592
Cumene			0.00	0.00E+00		EPA 745-B-97-016 lbs/ton		0.0000
2,4-Dinitrotoluene			0.00	0.00E+00		EPA 745-B-97-016 lbs/ton		0.0000
Dimethyl Sulfate			0.00	0.00E+00		EPA 745-B-97-016 lbs/ton		0.0000
Ethyl Benzene			0.00	0.00E+00		EPA 745-B-97-016 lbs/ton		0.0000
Formaldehyde			0.00	2.40E-04		EPA 745-B-97-016 lbs/ton		0.2406
Hexane			0.00	6.70E-05		EPA 745-B-97-016 lbs/ton		0.0672
Methyl Ethyl Ketone			0.00	3.90E-04		EPA 745-B-97-016 lbs/ton		0.3910
Methyl Hydrazine			0.00	3.90E-04		EPA 745-B-97-016 lbs/ton		0.3910
Methyl Methacrylate			0.00	1.70E-04		EPA 745-B-97-016 lbs/ton		0.1704
Methylene Chloride			0.00	5.00E-05		EPA 745-B-97-016 lbs/ton		0.0501
Phenol			0.00	1.60E-05		EPA 745-B-97-016 lbs/ton		0.0160
Propionaldehyde			0.00	3.80E-04		EPA 745-B-97-016 lbs/ton		0.3810
Tetrachloroethylene			0.00	4.30E-05		EPA 745-B-97-016 lbs/ton		0.0431

DESERET GENERATION AND TRANSMISSION COOPERATIVE

PLANT: Bonanza, Unit 1
SOURCE ID: Main Boiler
FUEL: Bituminous Coal (p. 3 of 3)

1,1,1-Trichlorethane			0.00	5.00E-05		EPA 745-B-97-016 lbs/ton		0.0501
Styrene			0.00	2.50E-05		EPA 745-B-97-016 lbs/ton		0.0251
Xylenes			0.00	3.70E-05		EPA 745-B-97-016 lbs/ton		0.0371
Vinyl acetate			0.00	7.60E-06		EPA 745-B-97-016 lbs/ton		0.0076

NOTES:

POTENTIAL TO EMIT

1) The maximum heat input (4,578 MMBtu/hr) is based on PSD modeling inputs.
2) All potential emissions are based on maximum expected heat input and 99% controlled and 1% uncontrolled.
3) Potential NOx emissions based on an expected Part 76 limit of .50 lbs/MMBTU (40 CFR 76.7).
4) Potential SO2, PM, and PM10 emissions based on current permit limits of 0.1 lbs/MMBtu, 0.0297 lbs/MMBtu and .0286 lbs/MMBtu, respectively, under Utah State Approval Order DAQE-186-98.
5) Potential emissions of all other criteria pollutants and HAPs based on emissions factors published in FIRE and site coal analysis as noted for each pollutant. Many emission factors used to estimate HAPs were for bituminous coal combustion), but some emission factors from other coals were used where there were no on-site data or emission factors for bituminous coal for the SIC classification.
Where a range of emissions factors was given in literature reviewed, the emission factors from FIRE generally used for consistancy. Site coal analysis was used when FIRE factors were not available.

CONTROL EQUIPMENT AND ASSOCIATED EFFICIENCIES

6) Emissions control equipment consists of an Baghouse, Scrubber, and Low-NOx Burners.
7) Baghouse control efficiencies for PM and PM10 were calculated based on comparing site emission limits with annual maximum heat input and average 9% ash concentration.
8) Baghouse control efficiencies for metals were calculated based on comparing average uncontrolled and average Baghouse controlled emissions data published in AIR TOXICS and FIRE.
Where a range of emissions factors was given in literature reviewed, the most conservative factors for uncontrolled emissions were used.
9) Control efficiencies for the remaining non-metals HAPs are unknown. Emissions factors used were without any control equipment.
10) PTE for NOx was calculated on the permitted emission rate.

DESERET GENERATION AND TRANSMISSION COOPERATIVE

PLANT: **Bonanza, Unit 1**
SOURCE ID: Main Boiler
FUEL: No. 2 Fuel Oil (p. 1 of 2)

PROCESS DATA

YEAR: 2000									
SCC CODE	DESIGN OUTPUT Mw Estimated	HEAT INPUT (MMBTU/HR)	CALCULATED HEATRATE (Btu/kWh)	PROCESS RATE	SCC UNITS Gallons	DESIGN RATE (SCC UNIT/HR)	SULFUR CONTENT (% BY WEIGHT)	FUEL DENSITY (LBS/GAL)	FUEL HEAT CONTENT (MMBTU/SCC UNIT)
10100501	500	576	1,152,000	250	1000	3.84	0.50%	8.300 (Estimated)	150.00

ESTIMATED EMISSIONS

POLLUTANT	CONTROL EQUIPMENT PRIMARY	CONTROL EQUIPMENT SECONDARY	CONTROL EFFICIENCY (%)	EMISSION FACTOR (LBS/SCC UNIT)	ASH/SULFUR FLAG	EMISSIONS ESTIMATION METHOD		POTENTIAL TO EMIT (TONS/YEAR)
CO			0.00	5.0000		Fire		0.63
VOC			0.00	0.2000		Fire		0.03
NOx			0.00	24.0000		Fire		3.00
SO2			0.00	41.5000		Fire		5.19
PM			0.00	2.0000		Fire		0.25
PM10			0.00	1.0000		Fire		0.13
Lead			0.00	(.9E-6/10^6Btu) 0.0014		Fire		1.69E-04
Arsenic			0.00	(4.0E-6 lbs/10^6 Btu) 0.0006		Fire		7.88E-05
Beryllium			0.00	(3.0E-6 lbs/10^6 Btu) 0.0005		Fire		5.63E-05
Cadmium			0.00	(3.0E-6 lbs/10^6 Btu) 0.0005		Fire		0.00
Chromium			0.00	(3.0E-6 lbs/10^6 Btu) 0.0009		Fire		0.00
Mercury			0.00	(3.0E-6 lbs/10^6 Btu) 0.0005		Fire		0.00
Manganese			0.00	(6.0E-6 lbs/10^6 Btu) 0.0009		Fire		0.0001
Nickel			0.00	(3.0E-6 lbs/10^6 Btu) 0.0005		Fire		0.00
POM			0.00	(3.3E-3 lbs/10^6 Btu) 0.4950		Fire		0.06

PLANT: **Bonanza, Unit 1**
SOURCE ID: Main Boiler
FUEL: No. 2 Fuel Oil (p. 2 of 2)

Formaldehyde			0.00	(3.5E-02 lbs/10^Btu 0.0350		Fire		0.00
Napthalene			0.00	(3.33E-4 lbs/1000 Gals) 0.0003		Fire		0.00
Selenium			0.00	(1.5E-05 lbs/10^Btu 0.0023		Fire		0.00

NOTES:

POTENTIAL TO EMIT

1) All emissions are based on uncontrolled emission factors since the large majority of the fuel oil burned is burned during uncontrolled startup conditions.

CONTROL EQUIPMENT AND ASSOCIATED EFFICIENCIES

2) Emission factors used were without any control equipment or with unspecified control equipment.

DESERET GENERATION AND TRANSMISSION COOPERATIVE

PLANT: Bonanza, Unit 1
SOURCE ID: AUXILIARY BOILER
FUEL: No. 2 Fuel Oil (p. 1 of 2)

PROCESS RATE

YEAR: 2000									
SCC CODE		ESTIMATED HEAT INPUT (MMBTU/HR)		PROCESS RATE	SCC UNITS Gallons	DESIGN RATE (SCC UNIT/HR)	SULFUR CONTENT (% BY WEIGHT)	FUEL DENSITY (LBS/GAL)	FUEL HEAT CONTENT (MMBTU/SCC UNIT)
10200501		97.11		50.00	1000.0	0.60	0.50	8.30	161.85

ESTIMATED EMISSIONS

POLLUTANT	CONTROL EQUIPMENT PRIMARY	CONTROL EQUIPMENT SECONDARY	CONTROL EFFICIENCY (%)	EMISSION FACTOR (LBS/SCC UNIT)	ASH/SULFUR FLAG	EMISSIONS ESTIMATION METHOD		POTENTIAL TO EMIT (TONS/YEAR)
CO			0.00	5.0000		AIRS		0.13
VOC			0.00	0.2000		AIRS		0.01
NOx			0.00	20.0000		AIRS		0.50
SO2			0.00	143.6000	S	AIRS		3.59
PM			0.00	(lbs/10^3 Gal) 2.0000		FIRE 6.22		0.05
PM10			0.00	(lbs/10^3 Gal) 1.0000		FIRE 6.22		0.03
Lead			0.00	(6.0E-06 lbs/10^6Btu 0.0005		FIRE 6.22		1.25E-05
Arsenic			0.00	(4.2 lbs/10^12 Btu) 0.0007		AIR TOXICS		1.70E-05
Beryllium			0.00	(3.0E-06 lbs/10^6 Btu) 0.0005		AIR TOXICS		1.25E-05
Cadmium			0.00	(3.0E-06 lbs/10^6 Btu) 0.0005		AIR TOXICS		1.25E-05
Chromium			0.00	(3.0E-06 lbs/10^6 Btu) 0.0005		AIR TOXICS		0.00
Mercury			0.00	(3.0E-06 lbs/10^6 Btu) 0.0005		AIR TOXICS		1.21E-05
Manganese			0.00	(6.0E-06 lbs/10^6 Btu) 0.0005		AIR TOXICS		0.00
Nickel			0.00	(6.0E-06 lbs/10^6 Btu) 0.0005		AIR TOXICS		0.00
POM			0.00	(3.3E-034 lbs/10^3 Gal) 0.0033		AIR TOXICS		0.00
Formaldehyde			0.00	(3.5E-02 lbs/10^3Gal) 0.0350		AIR TOXICS		0.00
Selenium			0.00	(1.5E-05 lbs/10^6 Btu) 0.0024		AIR TOXICS		0.00

DESERET GENERATION AND TRANSMISSION COOPERATIVE

PLANT: **Bonanza, Unit 1**
SOURCE ID: AUXILIARY BOILER
FUEL: No. 2 Fuel Oil (p. 2 of 2)

NOTES:

POTENTIAL TO EMIT

1) As vendor information available did not indicate heat input data, the maximum heat input to the boiler was estimated based on the boiler ratings for steam flow, pressure, and temperature, and assuming a steam return temperature of 212 F and boiler efficiency of 85%.
2) All potential controlled emissions are based on maximum heat input (estimated to be 150 MMBtu/SCC UNIT) and limited hours of operation..
3) Potential emissions of all other criteria pollutants and HAPs based on emissions factors published in FIRE 6.22 as noted for each pollutant.

CONTROL EQUIPMENT AND ASSOCIATED EFFICIENCIES

4) There is no emissions control equipment on the auxiliary boiler.

DESERET GENERATION AND TRANSMISSION COOPERATIVE

PLANT: Bonanza, Unit 1
SOURCE ID: Emergency Diesel Generator
FUEL: No. 2 Fuel Oil (p. 1 of 2)

PROCESS DATA

YEAR: 2000 SCC CODE	DESIGN OUTPUT (kW)	HEAT INPUT (MMBTU/HR)	ESTIMATED HEATRATE (Btu/kWh)	PROCESS RATE	SCC UNITS GALS	DESIGN RATE (SCC UNIT/HR)	SULFUR CONTENT (% BY WEIGHT)	FUEL DENSITY (LBS/GAL)	FUEL HEAT CONTENT (MMBTU/SCC UNIT)
20200401	750	7.95	10,000	2.75	1000.0	0.05	0.50	8.30	161.85

ESTIMATED EMISSIONS

POLLUTANT	CONTROL EQUIPMENT PRIMARY	CONTROL EQUIPMENT SECONDARY	CONTROL EFFICIENCY (%)	EMISSION FACTOR (LBS/MMBtu)	ASH/SULFUR FLAG	EMISSIONS ESTIMATION METHOD		POTENTIAL TO EMIT (TONS/YEAR)
CO			0.00	0.8100		AP-42		0.18
VOC			0.00	(13.7 lbs/ 10^3 Gal) 13.7000		AP-42		0.02
NOx			0.00	3.1000		AP-42		0.69
SO2			0.00	1.0100		MASS BALANCE		0.22
PM			0.00	(9.55 lbs/1000 gal) 9.5500		FIRE 6.22		0.01
PM10			0.00	(7.85 lbs/1000 gal) 7.8500		FIRE 6.22		0.01
Lead			0.00	8.90E-06		AIR TOXICS/ ENGR JUDGMT		0.00
Acetaldehyde			0.00	(2.52E-05 lbs/10^6 Btu) 2.52E-05		FIRE 6.22		0.00
Acrolein			0.00	(7.88E-06 lbs/10^6 Btu) 7.88E-06		FIRE 6.22		0.00
Benzene			0.00	(7.76E-04 lbs/10^6 Btu) 7.76E-04		FIRE 6.22		0.00
Formaldehyde			0.00	(7.89E-05 lbs/10^6 Btu) 7.89E-05		FIRE 6.22		0.00
Napthalene			0.00	(1.3E-04 lbs/10^6 Btu) 1.30E-04		FIRE 6.22		0.00
Propylene			0.00	(2.79E-03 lbs/10^6 Btu) 2.79E-03		FIRE 6.22		0.00
Toluene			0.00	(2.8E-04 lbs/10^6 Btu) 2.80E-04		FIRE 6.22		0.00
Xylenes			0.00	(1.93E-04 lbs/10^6 Btu) 1.93E-04		FIRE 6.22		0.00

DESERET GENERATION AND TRANSMISSION COOPERATIVE

PLANT: **Bonanza, Unit 1**
SOURCE ID: Emergency Diesel Generator
FUEL: No. 2 Fuel Oil (p. 2 of 2)

NOTES:

POTENTIAL TO EMIT

1) Due to a lack of data, the maximum heat input to the diesel was estimated by assuming a full load heat rate of 10,000 Btu/kWh.
2) All potential controlled emissions are based on maximum heat input (estimated to be 150 MMBtu/SCC UNIT) and unlimited hours of operation.
3) Potential emissions of all other criteria pollutants and HAPs based on emissions factors published in AIRS and AIR TOXICS, as noted for each pollutant.

CONTROL EQUIPMENT AND ASSOCIATED EFFICIENCIES

4) There is no emissions control equipment on the diesel engine.

DESERET GENERATION AND TRANSMISSION COOPERATIVE

PLANT: Bonanza, Unit 1
SOURCE ID: Emergency Diesel Fire Pump
FUEL: No. 2 Fuel Oil (p. 1 of 2)

PROCESS DATA

YEAR: 2000		CALCULATED HEAT INPUT (MMBTU/HR)	ESTIMATED HEATRATE (Btu/kWh)	PROCESS RATE	SCC UNITS GALS^3	DESIGN RATE (SCC UNIT/HR)	SULFUR CONTENT (% BY WEIGHT)	FUEL DENSITY (LBS/GAL)	FUEL HEAT CONTENT (MMBTU/SCC UNIT)
SCC CODE									
20200102		2.83	10,000	1.04	1000.0	0.02	0.50	8.30	161.85

ESTIMATED EMISSIONS

POLLUTANT	CONTROL EQUIPMENT PRIMARY	CONTROL EQUIPMENT SECONDARY	CONTROL EFFICIENCY (%)	EMISSION FACTOR (LBS/MMBtu)	ASH/SULFUR FLAG	EMISSIONS ESTIMATION METHOD		POTENTIAL TO EMIT (TONS/YEAR)
CO			0.00	0.8100		AP-42		0.07
VOC			0.00	0.1000		AP-42		0.01
NOx			0.00	3.1000		AP-42		0.26
SO2			0.00	1.0100		MASS BALANCE		0.09
PM			0.00	(42.5lbs/1000 gal) 0.2627		FIRE 6.22		0.02
PM10			0.00	(42.5lbs/1000 gal) 0.2627		FIRE 6.22		0.02
Lead			0.00	8.90E-06		AIR TOXICS/ ENGR JUDGMT		7.49E-07
Acetaldehyde			0.00	(7.67E-04 lbs/10^6 Btu) 7.67E-04		FIRE 6.22		6.46E-05
Acrolein			0.00	(9.25E-05 lbs/10^ Btu) 9.25E-05		FIRE 6.22		7.78E-06
Benzene			0.00	(9.33E-04 lbs/1066 Btu) 9.33E+00		FIRE 6.22		7.85E-01
1,3 Butadiene			0.00	(3.9E-05 lbs/1066 Btu) 3.90E-05		FIRE 6.22		0.00E+00
Formaldehyde			0.00	(1.18E-03 lbs/10^6 Btu) 1.18E-03		FIRE 6.22		9.93E-05
Mercury			0.00	(3.01E-07 lbs/10^6 Btu) 3.01E-07		FIRE 6.22		0.00E+00
Napthalene			0.00	(8.4E-05 lbs/10^6 Btu) 8.48E-05		AP-42		7.14E-06
Propylene			0.00	2.58E-03		AP-42		2.17E-04
Toluene			0.00	4.09E-04		AP-42		3.44E-05
Xylenes			0.00	(2.85E-04 lbs/10^6 Btu) 2.85E-04		FIRE 6.22		2.40E-05

DESERET GENERATION AND TRANSMISSION COOPERATIVE

PLANT: **Bonanza, Unit 1**
SOURCE ID: Emergency Diesel Fire Pump
FUEL: No. 2 Fuel Oil (p. 2 of 2)

NOTES:

POTENTIAL TO EMIT

1) Due to a lack of data, the maximum heat input to the diesel was estimated by assuming a full load heat rate of 10,000 Btu/kWh.
2) All potential controlled emissions are based on maximum heat input (estimated to be 150 MMBtu/SCC UNIT) and limited hours of operation.
3) Potential emissions of all other criteria pollutants and HAPs based on emissions factors published in AIRS and AIR TOXICS, as noted for each pollutant.
4) Emissions factors for all HAPs based on AP-42 emissions data for large bore engines (greater than 600 hp), but were used as the best data available.

CONTROL EQUIPMENT AND ASSOCIATED EFFICIENCIES

5) There is no emissions control equipment on the diesel engine.

DESERET GENERATION AND TRANSMISSION COOPERATIVE

PLANT: **Bonanza, Unit 1**
SOURCE ID: Construction Heaters
FUEL: Propane (p. 1 of 1)

PROCESS DATA

YEAR: 2000									
SCC CODE		HEAT INPUT (MMBTU/HR)		PROCESS RATE	SCC UNITS GALS^E3	DESIGN RATE (SCC UNIT/HR)		FUEL DENSITY (LBS/GAL)	FUEL HEAT CONTENT (MMBTU/SCC UNIT)
10500110		12.81		150	1000.0	0.140		4.40	91.50

ESTMATED EMISSIONS

POLLUTANT	CONTROL EQUIPMENT PRIMARY	CONTROL EQUIPMENT SECONDARY	CONTROL EFFICIENCY (%)	EMISSION FACTOR (LBS/SCC UNIT)	ASH/SULFUR FLAG	EMISSIONS ESTIMATION METHOD		POTENTIAL TO EMIT (TONS/YEAR)
PM			0.00	(.6 lbs/10^3 Gal 0.6000		FIRE 6.22		0.0450
PM-10			0.00	(.6 lbs/10^3 Gal 0.6000		FIRE 6.22		0.0450
SO2			0.00	(.082 lbs/10^3 Gal) 0.0820		FIRE6.22		0.0062
NOx			0.00	(20.2 lbs/10^3 Gal) 20.0000		FIRE 6.22		1.5000
CO			0.00	(3.2 lbs/10^3 Gal) 3.2000		FIRE 6.22		0.2400
TOC			0.00	0.5000		AP-42		0.04

NOTES:

POTENTIAL TO EMIT

1) All potential controlled emissions are based on maximum heat input and limited hours of operation.
2) Potential emissions of all other criteria pollutants based on emissions factors published in AP-42 and engineering judgement, as noted for each pollutant.

CONTROL EQUIPMENT AND ASSOCIATED EFFICIENCIES

3) There is no emissions control equipment on the construction heaters.

DESERET GENERATION AND TRANSMISSION COOPERATIVE

PLANT: Bonanza, Unit 1
SOURCE ID: Main Boiler
FUEL: Natural Gas (p. 1 of 3)

PROCESS DATA

YEAR: 2000									
SCC CODE	DESIGN OUTPUT (kW)	HEAT INPUT (MMBTU/HR)	CALCULATED HEATRATE (Btu/kWh)	PROCESS RATE	SCC UNITS	DESIGN RATE (SCC UNIT/HR)			FUEL HEAT CONTENT (MMBTU/SCC UNIT)
10200601	500,000	4,600	9,200	40,296.00	10^6 ft^3	4.60			1000.00

ESTIMATED EMISSIONS

POLLUTANT	CONTROL EQUIPMENT PRIMARY	CONTROL EQUIPMENT SECONDARY	CONTROL EFFICIENCY (%)	EMISSION FACTOR (LBS/SCC UNIT)	ASH/SULFUR FLAG	EMISSIONS ESTIMATION METHOD		POTENTIAL TO EMIT (TONS/YEAR)
CO			0.00	84.00		Fire 6.22		1,692.43
NOx	Low Nox Burners		0.00%	14.00		Fire 6.22		282.07
SO2			0.00	0.60	S	Fire 6.22		12.09
PM			0.00	7.60		Fire 6.22		153.12
PM10			0.00	7.60		Fire 6.22		153.12
Acenapthene			0.00	1.80E-06		Fire 6.22		0.00
Acenapthylne			0.00	1.80E-06		Fire 6.22		0.00
Anthracene			0.00	2.40E-06		Fire 6.22		0.00
Arsenic			0.00	4.00E-04		Fire 6.22		0.01
Barium			0.00	4.40E-03		Fire 6.22		0.09
Benzene			0.00	2.10E-03		Fire 6.22		0.04
Benzo (a) Anthracene			0.00	1.80E-06		Fire 6.22		0.00
Benzo (a) Pyrene			0.00	1.20E-06		Fire 6.22		0.00
Benzo (b) Fluoranthene			0.00	1.80E-06		Fire 6.22		0.00
Benzo (g,h,I) Perylene			0.00	1.20E-06		Fire 6.22		0.00
Benzo (k) Fluoranthene			0.00	1.80E-06		Fire 6.22		0.00

DESERET GENERATION AND TRANSMISSION COOPERATIVE

PLANT: **Bonanza, Unit 1**
SOURCE ID: Main Boiler
FUEL: Natural Gas (p. 2 of 3)

Beryllium			0.00	1.20E-05		Fire 6.22		0.00
n-Butane			0.00	2.10E+00		Fire 6.22		42.31
Cadmium			0.00	1.10E-03		Fire 6.22		0.02
Chromium			0.00	1.40E-03		Fire 6.22		0.03
Chrysene			0.00	1.80E-06		Fire 6.22		0.00
Cobalt			0.00	8.40E-05		Fire 6.22		0.00
Dibenzo (a,h) Anthracene			0.00	1.20E-06		Fire 6.22		0.00
Dichlorobenzene			0.00	1.20E-03		Fire 6.22		0.02
Dimethylbenz (a) Anthracene			0.00	1.60E-05		Fire 6.22		0.00
Ethane			0.00	3.10E+00		Fire 6.22		62.46
Fluoranthene			0.00	3.00E-06		Fire 6.22		0.00
Fluorine			0.00	2.80E-06		Fire 6.22		0.00
Formaldehyde			0.00	7.50E-02		Fire 6.22		1.51
Ideno (1,2,3-cd) Pyrene			0.00	1.80E-06		Fire 6.22		0.00
Lead			0.00	5.00E-04		Fire 6.22		0.01
Manganese			0.00	3.80E-04		Fire 6.22		0.01
Mercury			0.00	1.80E-06		Fire 6.22		0.00
Methane			0.00	1.10E-03		Fire 6.22		0.02
2-methyl Napthalene			0.00	1.80E+00		Fire 6.22		36.27
3-Methylchloranthrene			0.00	2.60E+00		Fire 6.22		52.38
Molybdenum			0.00	1.10E-03		Fire 6.22		0.02
N-Hexane			0.00	1.80E+00		Fire 6.22		36.27
N-Pentane			0.00	2.60E+00		Fire 6.22		52.38
Napthalene			0.00	6.10E-04		Fire 6.22		0.01

DESERET GENERATION AND TRANSMISSION COOPERATIVE

PLANT: Bonanza, Unit 1
SOURCE ID: Main Boiler
FUEL: Natural Gas (p. 3 of 3)

Nickel			0.00	6.49E-07		Fire 6.22		0.00
Phenanthrene			0.00	1.60E+00		Fire 6.22		32.24
POM			0.00	6.49E-07		Fire 6.22		0.00
Propane			0.00	1.60E+00		Fire 6.22		32.24
Pyrene			0.00	5.00E-06		Fire 6.22		0.00
Selenium			0.00	2.40E-05		Fire 6.22		0.00
Toluene			0.00	1.60E+00		Fire 6.22		32.24
TOC			0.00	5.00E-06		Fire 6.22		0.00
Vanadium			0.00	2.40E-05		Fire 6.22		0.00
VOC			0.00	5.50E+00		Fire 6.22		110.81
Zinc			0.00	2.90E-02		Fire 6.22		0.58

NOTES:

POTENTIAL TO EMIT

1) All potential controlled emissions are based on maximum heat input and limited hours of operation
2) Potential NOx emissions based on an expected Part 76 limit of .50 lbs/MMBTU (40 CFR 76.7).
3) Potential SO2, PM, and PM10 emissions based on emission factors derived from FIRE 6.22.
4) Potential emissions of all other criteria pollutants based on emissions factors published in FIRE 6.22, as noted for each pollutar

CONTROL EQUIPMENT AND ASSOCIATED EFFICIENCIES

5) Emission factors used were without any control equipment or with unspecified control equipment.

DESERET GENERATION AND TRANSMISSION COOPERATIVE

PLANT: Bonanza, Unit 1
SOURCE ID: AUXILIARY BOILER
FUEL: Natural Gas (p. 1 of 3)

PROCESS RATE

YEAR: 2000									
SCC CODE		ESTIMATED HEAT INPUT (MMBTU/HR)		PROCESS RATE	SCC UNITS	DESIGN RATE (SCC UNIT/HR)			FUEL HEAT CONTENT (MMBTU/SCC UNIT)
10200602		97.10		4.30	10^6 ft^3	0.09			1060.00

ESTIMATED EMISSIONS

POLLUTANT	CONTROL EQUIPMENT PRIMARY	CONTROL EQUIPMENT SECONDARY	CONTROL EFFICIENCY (%)	EMISSION FACTOR (LBS/SCC UNIT)	ASH/SULFUR FLAG	EMISSIONS ESTIMATION METHOD		CONTROLLED EMISSIONS (TONS/YEAR)
CO			0.00	84.00		Fire 6.22		0.18
NOx	Low Nox Burners		0.00%	100.00		Fire 6.22		0.22
SO2			0.00	0.60	S	Fire 6.22		0.00
PM			0.00	7.60		Fire 6.22		0.02
PM10			0.00	7.60		Fire 6.22		0.02
Acenapthene			0.00	1.80E-06		Fire 6.22		0.00
Acenapthylne			0.00	1.80E-06		Fire 6.22		0.00
Anthracene			0.00	2.40E-06		Fire 6.22		0.00
Arsenic			0.00	2.00E-04		Fire 6.22		0.00
Barium			0.00	4.40E-03		Fire 6.22		0.00
Benzene			0.00	2.10E-03		Fire 6.22		0.00
Benzo (a) Anthracene			0.00	1.80E-06		Fire 6.22		0.00
Benzo (a) Pyrene			0.00	1.20E-06		Fire 6.22		0.00

DESERET GENERATION AND TRANSMISSION COOPERATIVE

PLANT: **Bonanza, Unit 1**
SOURCE ID: AUXILIARY BOILER
FUEL: Natural Gas (p. 2 OF 3)

Benzo (b) Fluoranthene			0.00	1.80E-06		Fire 6.22		0.00
Benzo (g,h,I) Perylene			0.00	1.20E-06		Fire 6.22		0.00
Benzo (k) Fluoranthene			0.00	1.80E-06		Fire 6.22		0.00
Beryllium			0.00	1.20E-05		Fire 6.22		0.00
n-Butane			0.00	2.10E+00		Fire 6.22		0.00
Cadmium			0.00	1.10E-03		Fire 6.22		0.00
Chromium			0.00	1.40E-03		Fire 6.22		0.00
Chrysene			0.00	1.80E-06		Fire 6.22		0.00
Cobalt			0.00	8.40E-05		Fire 6.22		0.00
Dibenzo (a,h) Anthracene			0.00	1.20E-06		Fire 6.22		0.00
Dichlorobenzene			0.00	1.20E-03		Fire 6.22		0.00
Dimethylbenz (a) Anthracene			0.00	1.60E-05		Fire 6.22		0.00
Ethane			0.00	3.10E+00		Fire 6.22		0.01
Fluoranthene			0.00	3.00E-06		Fire 6.22		0.00
Fluorine			0.00	2.80E-06		Fire 6.22		0.00
Formaldehyde			0.00	7.50E-02		Fire 6.22		0.00
Ideno (1,2,3-cd) Pyrene			0.00	1.80E-06		Fire 6.22		0.00
Lead			0.00	5.00E-04		Fire 6.22		0.00
Manganese			0.00	3.80E-04		Fire 6.22		0.00
Mercury			0.00	2.60E-04		Fire 6.22		0.00
Methane			0.00	2.30E+00		Fire 6.22		0.00
2-methyl Napthalene			0.00	2.40E-05		Fire 6.22		0.00
3-Methylchloranthrene			0.00	1.80E-06		Fire 6.22		0.00
Molybdenum			0.00	1.10E-03		Fire 6.22		0.00

DESERET GENERATION AND TRANSMISSION COOPERATIVE

PLANT: **Bonanza, Unit 1**
SOURCE ID: AUXILIARY BOILER
FUEL: Natural Gas (p. 3 OF 3)

N-Hexane			0.00	1.80E+00		Fire 6.22		0.00
N-Pentane			0.00	2.60E+00		Fire 6.22		0.01
Napthalene			0.00	6.10E-04		Fire 6.22		0.00
Nickel			0.00	2.10E-03		Fire 6.22		0.00
Phenanthrene			0.00	1.70E-05		Fire 6.22		0.00
Propane			0.00	1.60E+00		Fire 6.22		0.00
Pyrene			0.00	5.00E-06		Fire 6.22		0.00
Selenium			0.00	2.40E-05		Fire 6.22		0.00
Toluene			0.00	3.40E-03		Fire 6.22		0.00
TOC			0.00	1.10E+01		Fire 6.22		0.02
Vanadium			0.00	2.30E-03		Fire 6.22		0.00
VOC			0.00	5.50E+00		Fire 6.22		0.01
Zinc			0.00	2.90E-02		Fire 6.22		0.00

NOTES:

POTENTIAL TO EMIT

1) All potential controlled emissions are based on maximum heat input and limited hours of operation
2) Potential NOx emissions based on an expected Part 76 limit of .50 lbs/MMBTU (40 CFR 76.7).
3) Potential SO2, PM, and PM10 emissions based on emission factors derived from FIRE 6.22.
4) Potential emissions of all other criteria pollutants based on emissions factors published in FIRE 6.22, as noted for each pollutant.

CONTROL EQUIPMENT AND ASSOCIATED EFFICIENCIES

5) Emission factors used were without any control equipment or with unspecified control equipment.

E

Appendix E

List and Description of Any

Insignificant Emission Units

APPENDIX E
INSIGNIFICANT ACTIVITIES

Insignificant Activities

The following items have been identified as "insignificant" for the Bonanza Power Plant in accordance with the EPA "White Paper" dated July 10, 1995.

NO_x: (Threshold 1 ton per year)

1. Auxiliary Boiler (fuel oil)	0.50 TPY	Reference D-6
2. Emergency Generator (fuel oil)	0.64 TPY	Reference D-8
3. Emergency Fire Pump (fuel oil)	0.24 TPY	Reference D-10
4. Auxiliary Boiler (Natural Gas)	0.22 TPY	Reference D-16

PM: (Threshold 1 ton per year)

1. Auxiliary Boiler (Natural Gas)	0.02 TPY	Reference D-13
2. Auxiliary Boiler (fuel oil)	0.05 TPY	Reference D-6
3. Emergency Generator (fuel oil)	0.01 TPY	Reference D-8
4. Emergency Fire Pump (fuel oil)	0.02 TPY	Reference D-10
5. Construction Heater (propane)	0.05 TPY	Reference D-12

PM_{10}: (Threshold 1 ton per year)

1. Auxiliary Boiler (Natural Gas)	0.02 TPY	Reference D-16
2. Auxiliary Boiler (fuel oil)	0.03 TPY	Reference D-6
3. Emergency Generator (fuel oil)	0.01 TPY	Reference D-8
4. Emergency Fire Pump (fuel oil)	0.02 TPY	Reference D-10

APPENDIX E
INSIGNIFICANT ACTIVITIES

VOC: (Threshold 1 ton per year)

1. Auxiliary Boiler (Natural Gas)	0.01 TPY	Reference D-18
2. Auxiliary Boiler (fuel oil)	0.01 TPY	Reference D-6
3. Emergency Generator (fuel oil)	0.02 TPY	Reference D-8
4. Emergency Fire Pump (fuel oil)	0.01 TPY	Reference D-10
5. Construction Heaters (Propane)	0.01 TPY	Reference D-12

HAPs: (Threshold 500 pounds per year)

1. Auxiliary Boiler (Natural Gas)	0.01 TPY	Reference D-16, D-17, D-18
2. Auxiliary Boiler (fuel oil)	0.01 TPY	Reference D-6
3. Emergency Generator (fuel oil)	0.01 TPY	Reference D-8
4. Emergency Fire Pump (fuel oil)	0.01 TPY	Reference D-10
5. Construction Heaters (Propane)	0.01 TPY	Reference D-12

F

Appendix F

List of All Air Pollution Control Equipment

POLLUTION CONTROL EQUIPMENT

The Bonanza Unit I design incorporates the use of Low Nox Burners, a Baghouse and a wet limestone Scrubber.

Low NO_x Burners were installed by Foster-Wheeler during the initial design and construction of the boiler. In 1997, a new generation of Low NO_x Burners designed by Advanced Burner Technologies were installed to help the Unit meet its Phase 2 early election limits. The low NO_x burners work on the principal that a cooler flame combusts less of the nitrogen in the coal therefore creating less NO_x.

The flyash and other particulates created by the coal combustion are removed by a fabric filter baghouse. The baghouse was designed and built Ecolaire Inc. The baghouse consists of two separate sections with twelve compartments each. Each compartment has 450 bags for a total of 10,800 bags. The ducting in the baghouse allows for the use of any combination of compartments to be used at any time. Under normal circumstances, both sections of the baghouse are in use at the same time and all compartments are in use except during compartment maintenance. The baghouse is 99.9 percent efficient.

The sulfur dioxide created by the combustion process is removed by a wet limestone scrubbing system. The scrubber system was designed and built by Combustion Engineering. The scrubber system consists of three modules, two of which are used at any one time. The third module is used as a spare. As the flue gas passes through the modules, it passes through a slotted tray, then two or three levels of a limestone slurry spray. The SO_2 is removed through contact with the limestone slurry on the tray and the spraying process. The PH of the solution is controlled by the limestone. On occasion, scrubber enhancers such as adipic acid are also added to the slurry as needed to aid in the removal process. The solids that are formed by this process are removed by a sludge handling system, mixed with flyash and conveyed or trucked to an on-site landfill. The scrubber system currently removes greater than 90 percent of the SO_2 contained in the fuel.

G

Appendix G

List and Description of All

Compliance Monitoring Equipment

and EPA Test Methods Used

MONITORING AND TEST METHODS

Bonanza Unit I is in compliance with all known monitoring and reporting requirements which are contained within federal statutes for all Title V emission sources listed in this application. Deseret Generation and Transmission Cooperative will continue to maintain a full compliance status with all applicable monitoring and reporting requirements which affect these Title V emission sources. The following paragraphs contain a summary of all the monitoring done at Unit I to comply with the monitoring requirements.

Bonanza Unit I currently has a continuous emissions monitoring system (CEMS) for monitoring compliance of the Unit I boiler emissions. The parameters monitored include SO_2, NO_x, CO_2, flow and opacity. The monitoring is required under the provisions of the New Source Performance Standards (NSPS) contained in 40 CFR Part 60 subpart Da (Part 60), 40 CFR Part 75 (Part 75).

NO_x is monitored for pounds per million BTU (#/mmBTU) for a thirty day rolling average for NSPS and an annual average for 40 CFR Part 76. SO_2 is monitored for pounds per million BTU for a thirty day rolling average and percent removal for a thirty day rolling average for NSPS and pounds per hour for quarterly and annual total tons emitted under Part 75. CO_2 is monitored as a diluent for SO_2 and NO_x for NSPS and Part 75 and also pounds per hour for quarterly and annual totals tons of CO_2 emitted for Part 75. Opacity is monitored to assure compliance with the the opacity emission standards for NSPS. Flow is monitored for use in the pounds per hour calculations of SO_2 and CO_2 for part 75.

Current specific CEMS monitoring and reporting requirements for NO_x are contained in 40CFR Part 60 sections 60.47a, 60.48a, 60.49a, appendix A, Appendix B, Appendix F; 40 CFR Part 75 subparts A, B, C, D, F, G and appendices A, B, C, F and H.

SO_2 monitoring and reporting requirements are contained in 40 CFR Part 60 sections 60.47a, 60.48a and 60.49a; 40 CFR Part 75 Subparts A, B, C, F, G and appendices A, B, C, F, and H.

CO_2 monitoring and reporting requirements are contained in 40 CFR part 75 Subparts A, B, C, D, F, G and appendices A, B, C, F, and H.

Opacity monitoring and reporting requirements are contained in 40 CFR Part 60 sections 60.42a, 60.48a, 60.49a, Appendix a and Appendix B; 40CFR Part 75 Subparts A, B, C, F, G and appendices A, B and H.

Flow monitoring requirements are contained in 40 CFR Part 75 subparts A, B, C, D, F, G and appendices A, B, C and F.

APPENDIX G
MONITORING AND TEST METHODS

The CEMS monitors the gaseous pollutants from the 320 foot level of the stack and the inlet ducts to the scrubber. Opacity is measured from the two ducts between the baghouses and ID fans. The opacity monitors are located on the duct work because the stack is a wet stack. Data from the two opacity monitors are averaged and a stack exit opacity is calculated.

Inlet monitoring or Coal analysis may be used to calculate inlet SO2 pounds per million BTU for removal calculation purposes. Coal sampling and analysis is done according to the applicable ASTM methods and 40 CFR 60 method 19 calculations.

The gaseous monitoring is accomplished by the use of an extractive dilution system in the main stack. The dilution probe is located at the 320 foot level of the stack and inlet ducts to the scrubber. The sample is taken by heated sample lines to the sixth floor of the scrubber where the analyzer and computer shelter is located. The data from the analyzers is sent to the data handling and acquisition system where it is stored and used to generate reports to the Federal EPA (40 CFR part 75).

The CEMS is operated in compliance with all federal, manufacturers and company regulations and policies. All the maintenance logs, maintenance procedures and quality assurance procedures that are required by these regulations and documents are strictly followed.

No other "continuous" monitoring activities related to any Title V listed source in the application are currently required. It is anticipated that no other "continuous" emissions monitoring related to Title V listed sources will be required.

All known record keeping and reporting requirements contained in 40 CFR 60, 40 CFR 75 are being met.

The ambient monitoring and record keeping requirements contained in 40 CFR 51, 40 CFR 53 have been satisfied and no further monitoring of ambient air quality is needed for Unit I.

Deseret Generation and Transmission cooperative operates a Spectrum continuous emissions monitoring system (CEMS) to determine the continuous compliance with all applicable stack emissions regulations. This system measures SO_2, NO_x, CO_2, flow and opacity.

APPENDIX G
MONITORING AND TEST METHODS

SO_2 is monitored for pounds per million BTU (#/mmBtu), pounds per hour and percent removal. NO_x is monitored for #/MMBtu. Flow is monitored for standard cubic feet per hour (SCFH). CO_2 is monitored for pounds per hour and opacity is measured in percent.

The analyzers consist of a three TECO 41H CO_2 analyzers, three TECO 43b SO_2 analyzers, a TECO 42D NO_x analyzer, two RM-41 opacity monitors a Model 100 ultrasonic flow analyzer. Three SLC 50 PLC's control the system, two IRTP Model 100 PLC's perform the data collection and a Dell 466 computer handles the data compilation and reporting.

The CEMS is operated in compliance with all federal, manufacturers and company regulations and policies. All the maintenance logs, maintenance procedures and quality assurance procedures that are required by these regulations and documents are strictly followed.

EPA test methods from 40 CFR Appendix A are used to determine the relative accuracy of the analyzers and computer systems. These tests are run on an annual or semi annual basis. Quarterly linearity checks and cylinder gas audits are performed on the gaseous analyzers and quarterly opacity filter audits are performed on the opacity monitors. Daily calibration gas checks are also performed on the gaseous monitors and a daily interference check is run on the flow monitor. EPA test methods 1-5 are required each five years to determine the compliance with particulate limits for Unit I.

Opacity monitoring and reporting requirements are contained in 40 CFR Part 60 sections 60.42a, 60.48a, 60.49a, Appendix a and Appendix B; 40CFR Part 75 Subparts A, B, C, F, G and appendices A, B and H.

Flow monitoring requirements are contained in 40 CFR Part 75 subparts A, B, C, D, F, G and appendices A, B, C and F.

No other compliance monitoring is currently required.

H

TABLE H-1

LIST OF FEDERAL AIR QUALITY REQUIREMENTS WHICH ARE APPLICABLE TO THE BONANZA POWER PLANT

1. Periodic reporting of emissions is required. The Bonanza Power Plant will submit the following in meeting this requirement:

- **A.** Quarterly excess emissions and monitoring systems performance report pursuant to **40 CFR 60.7(c), 40 CFR 60.49a, 40 CFR 75.64 and 75.65.**.
- **B.** Annual emission inventory to determine EPA emission fees for the following pollutants:
  1. SO_2
  2. NO_x
  3. PM_{10}
  4. HAPS
  5. CO
  6. VOC
  7. Lead

2. PM and PM_{10} Emission testing is required of all sources at least once every five years. This requirement is met by testing the stack for particulates using methods 1-5 as contained in 40 CFR 60, Appendix A and Method 201 from 40 CFR 52 or any other method approved by the administrator.

3. Pursuant to **40 CFR 60.43a(b)(1),** sulfur emissions as SO_2 at the Bonanza Power Plant Unit 1 are not to exceed 0.0976 lb/MMBTU heat input over a rolling 12-month average. Compliance shall be based upon CEM data and fuel heat input. Compliance shall be determined by calculating the rolling 12-month average: on the first day of each month a new 12-month average shall be calculated using data from the previous 12 months.

4. Pursuant to **40 CFR 60.43a(a)(1) and (a)(2),** Bonanza power Plant Unit 1 shall achieve at least 70% SO_2 removal efficiency based on a 30-day rolling average when emissions are below 0.60 #/mmBtu and 90% removal efficiency when emissions are above 0.60 #/mmBtu..

5.. Bonanza Power Plant Unit 1 SO_2 emissions, pursuant to PSD permit number **PSD-UO-0001-2000,** shall not exceed 0.15 lb/MMBTU heat input as averaged over 30 successive boiler operating days.

6. Bonanza Power Plant Unit 1 NO_x emissions, pursuant to PSD permit number **PSD-UO-0001-2000 and 40 CFR 60, 44a** Bonanza Power Plant Unit 1 shall not discharge NO_x to the amosphere at a rate exceeding 0.60 lb /MMBTU heat input as a 30-day rolling average value averaged over 30 successive boiler operating days. Compliance shall be based on CEM data and fuel heat input. Compliance shall be determined by calculating the arithmetic average of all valid hourly emission rates (at least two values each hour are required) for NO_x for 30 successive boiler operating days. **40 CFR 60.44(a)**

   Pursuant to **40 CFR 76.8(a) and (b)** the Bonanza Power Plant (a Phase II unit with a Group l boiler) has made an early NO_x reduction election which restricts NO_x emissions to 0.50 #/MMBtu on an annual average **(40 CFR 76.5(a)(2))** from January 1, 1997 to December 31, 2007. After this time, any new NO_x limitation applicable to Phase II Group I boilers (wet bottom, wall fired boilers) which might have been promulgated in the interim would apply to the Bonanza Power Plant.

7. Bonanza Power Plant Unit 1 shall not discharge to the atmosphere particulate matter at a rate exceeding 0.0297 lbs/MMBTU heat input as determined by **40 CFR 60 Appendix A, Methods 1-5 and 19. (PSD-UO-0001-2000, 40 CFR 60.42a(a)(1).**

8. Bonanza Power Plant Unit 1 shall not discharge to the atmosphere PM_{10} particulate matter at a rate exceeding 0.0286 lbs/MMBTU heat input as determined by **40 CFR 60 Appendix A, Methods 1, 2, 3, 4, 201, 201a and 19 or other methods approved by the administrator. (PSD-UO-0001-2000, 40 CFR 60.42a(a)(1).**

9. Visible emissions from the tall stack shall not exceed 20% opacity as determined primarily by CEM equipment, except for one six-minute period per hour of not more than 27% opacity for the tall stack, as determined by CEM equipment. EPA Method 9 **(40 CFR 60 Appendix A)** may be used when the opacity COM equipment is not operating. **(PSD-UO-0001-2000, 40 CFR 60, 42a(b))**

10. The owner/operator shall install, calibrate, maintain, and operate a continuous emissions monitoring (CEM) system on the 600 foot stack. The owner/operator shall record the output of the system, for measuring the opacity of emissions, the SO_2 emissions, the NO_x emissions, and diluent. Procedures to be followed for (1) testing, monitoring, and reporting of excess emissions of particulate, opacity, sulfur dioxide and nitrogen oxides, and for (2) the purpose of demonstrating compliance with the emission limitations of the applicable sections of **40 CFR 60.7, 60.8, 60.11, 60.13, Subpart Da, Appendix A, Methods 1-7, Appendix B, Performance Specifications 1, 2, and 3.** These sections shall apply only to the extent they are specifically set forth in this **Table H-1 of the Title V Permit Application** for the Bonanza Power Plant.

11. A quality control/assurance plan/manual for the continuous monitoring system shall be developed and implemented. As a minimum, the quality control program shall have written procedures for each of the following activities pursuant to **40 CFR 60 Appendix F, 40 CFR 75 Appendix B.**

   A. Installation of CEM's.
   B. Calibration of CEM's.
   C. Zero and calibration checks and adjustments for CEM's.
   D. Preventive maintenance for CEM's (including parts inventory).
   E. Data recording and reporting.
   F. Program of corrective action for inoperable CEM's.
   G. Annual evaluation of CEM system.

12. **40 CFR Part 71 - Federal Operating Permit Programs** - This part contains elements of an operating permit program administered by the EPA Administrator. The tenth circuit court of appeals rendered a verdict that places the Bonanza Plant in Indian country. That decision places the plant under the control of EPA Region 8 for PSD and Title V. 40 CFR Part 71 **"does apply"** to the Bonanza Power Plant.

TABLE H-2

REVIEW OF FEDERAL REGULATIONS WHICH DO NOT APPLY TO THE BONANZA POWER PLANT

40 CFR Part 50 - National Primary and Secondary Ambient Air Quality Standards
National primary and secondary ambient air quality standards are set forth in this part. Part 50 does not contain requirements for stationary sources. This part applies to regulatory authorities therefore the requirements of this section **"do not apply"** to the Bonanza Power Plant.

40 CFR Part 51 - Requirements for Preparation, Adoption, and Submittal of Implementation Plans - This part sets forth requirements for preparation, adoption, and submittal of implementation plans. Part 51 contains administrative requirements that regulatory agencies must follow. This part applies to regulatory authorities and **"does not apply"** to the Bonanza Power Plant.

40 CFR Part 52 - Approval and Promulgation of Implementation Plans - This part sets forth the Administrator's approval and disapproval of State plans and the Administrator's promulgation of such plans or portions thereof. Part 52 contains administrative requirements that regulatory agencies must follow. The regulations contained in this section **"do not apply"** to the Bonanza Power Plant with the exception of the Prevention of Significant Deterioration program requirements of 40 CFR 52.21 which are contained in paragraphs 4 through 12 of table H-1.

40 CFR Part 54 - Prior Notice of Citizen Suits - Section 304 of the Clean Air Act authorizes the commencement of civil actions to enforce the Act or to enforce certain requirements promulgated pursuant to the Act. This part prescribes the procedures governing the giving of notices required by subsection 304(b) of the Act as a prerequisite to the commencement of such actions. The requirements of this part **"do not apply"** to the Bonanza Power Plant.

40 CFR Part 55 - Outer Continental Shelf Air Regulations - This part applies to all sources located on the outer continental shelf. The Bonanza Power Plant is not an outer continental shelf source, therefore the requirements of this part **"do not apply"**.

40 CFR Part 56 - Regional Consistency - The purpose of this part is to assure that fair and uniform application of policies and procedures is employed in implementing and enforcing the Clean Air Act. This part applies to regulatory agencies and the requirements **"do not apply"** to the Bonanza Power Plant.

40 CFR Part 57 - Primary Nonferrous Smelter Orders - This source is not a nonferrous smelter. The requirements of this part **"do not apply"** to the Bonanza Power Plant.

40 CFR Part 58 - Ambient Air Quality Surveillance - This part contains criteria and requirements for ambient air quality monitoring and requirements for reporting air quality data and information. This part applies to State or local agencies operating a monitoring network. It also applies to owners or operators of proposed sources required to monitor ambient air quality. The requirements of this part **"do not apply"** to the Bonanza Power Plant because AO # DAQE-523-95 does not contain requirements requiring ambient air quality monitoring.

40 CFR Part 60 - Standards of Performance for New Stationary Sources (NSPS) - This part applies to the owner or operator of any stationary source which contains an affected facility, the construction or modification of which is commenced after the date of publication in this part of any standard (or, if earlier, the date of publication of any proposed standard) applicable to that facility. Only the requirements of subpart Da specifically set forth in paragraphs 3 through 12 and 23 through 25 of table H-1 are applicable. The requirements of all other subparts of this part **"do not apply"** to the Bonanza Power Plant. The requirements contained in previous approval orders issued by the Utah DAQ and PSD permits issued by EPA which will be superceeded by EPA permit number **PSD-UO-0001-2000 "are not applicable"**. These approval orders and permits include those issued April 29, 1981, July 11, 1984 and July 2, 1987.

40 CFR Part 61 - National Emission Standards for Hazardous Air Pollutants (NESHAP) This part applies to the owner or operator of any stationary source for which a standard is prescribed under this part. Specific requirements were reviewed during the recent "NOI" process which resulted in a modified approval order dated June 14, 1995 and a determination was made that the requirements of this part are **"not applicable"** to the Bonanza Power Plant.

40 CFR Part 62 - Approval and Promulgation of State Plans for Designated Facilities and Pollutants - This part sets forth the Administrator's approval and disapproval of State plans for control of designated pollutants and facilities. The requirements of this part **"do not apply"** to the Bonanza Power Plant.

40 CFR Part 63 - National Emission Standards for Hazardous Air Pollutants for Source Categories - This part contains regulations governing compliance extensions for early reductions of hazardous air pollutants and MACT standards for specific source categories. To date, the requirements of this part **"do not apply"** to the Bonanza Power Plant.

40 CFR Part 65 - Delayed Compliance Orders - Section 113(d) of the Clean Air Act authorizes the Administrator to issue to certain sources delayed compliance orders permitting a delay in compliance with applicable regulations contained in a State implementation plan. This part sets forth the procedures for issuing such orders. The requirements of this part **"do not apply"** to the Bonanza Power Plant.

40 CFR Part 66 - Assessment and Collection of Noncompliance Penalties by EPA - This part sets forth the procedures by which EPA will administer the noncompliance penalty provisions of section 120 of the Clean Air Act. Duties of the source owner or operator upon receipt of a notice of noncompliance penalties are also described. This part sets forth administrative requirements and **does not contain any requirements** applicable to the Bonanza Power Plant.

40 CFR Part 67 - EPA Approval of State Noncompliance Penalty Program - This part describes the standards and procedures under which EPA will approve State programs for administering the noncompliance penalty program under Section 120 of the Clean Air Act and will evaluate actions taken by States with approved programs. The requirements of this part **"do not apply"** to the Bonanza Power Plant, although the administrative requirements may apply to EPA and the DAQ in dealing with non compliance at the plant.

40 CFR Part 69 - Special Exemptions From Requirements of the Clean Air Act - This part lists special exemptions from requirements of the Clean Air Act. This source has no such exemptions, therefore this part **"does not apply"** to the Bonanza Power Plant.

40 CFR Part 70 - State Operating Permit Programs - This part defines the minimum elements required by the Act for State operating permit programs and the corresponding standards and procedures by which the Administrator will approve, oversee, and withdraw approval of State operating permit programs. This part **"does not"** contain requirements which are directly applicable to the Bonanza Power Plant.

40 CFR Part 75 - Continuous Emission Monitoring - The provisions of this part are applicable to each affected unit subject to Acid Rain emission limitations or reduction requirements for SO_2 and NO_x. Unless the requirements are listed in paragraphs 23, 24, and 25 of Table H-1 of this permit application, the requirements of this part are **"not applicable"** to the Bonanza Power Plant.

40 CFR Part 79 - Registration of Fuels and Fuel Additives - The regulations of this part apply to the registration of fuels and fuel additives. This source does not manufacture fuels, therefore, the requirements of this part **"do not apply"** to the Bonanza Power Plant.

40 CFR Part 80 - Regulation of Fuels and Fuel Additives - This part prescribes regulations for the control and/or prohibition of fuels and additives for use in motor vehicles and motor vehicle engines; therefore, the requirements of this part **"do not apply"** to the Bonanza Power Plant.

40 CFR Part 81 - Designation of Areas for Air Quality Planning Purposes - Air quality control region designations, attainment status designations, and mandatory Class I federal areas where visibility is an important value are listed in this part. The Bonanza Power Plant is not located in any area so designated, therefore, the requirements of this part **"are not applicable"**.

40 CFR Part 82 - Protection of Stratospheric Ozone - Subpart F of this part contains requirements applicable to the Bonanza Power Plant. The requirements of the other subparts **"do not apply" .**

40 CFR Part 85 - Control of Air Pollution From Motor Vehicles and Motor Vehicle Engines - This part is not applicable to stationary sources and therefore **"does not apply"** to the Bonanza Power Plant.

40 CFR Part 86 - Control of Air Pollution From New and In-Use Motor Vehicle and New and In-Use Motor Vehicle Engines: Certification and Test Procedures - This part is not applicable to stationary sources and therefore **"does not apply"** to the Bonanza Power Plant.

40 CFR Part 87- Control of Air Pollution From Aircraft and Aircraft Engines - This part is not applicable to stationary sources and therefore **"does not apply"** to the Bonanza Power Plant.

40 CFR Part 88 - Clean-Fuel Vehicles - This part is not applicable to stationary sources and therefore **"does not apply"** to the Bonanza Power Plant.

40 CFR Part 93 - Determining Conformity of Federal Actions To State or Federal Implementation Plans - The purpose of this part is to implement section 176(c) of the Act. This part **"does not apply"** to the Bonanza Power Plan

TABLE H-3
PERMIT SHIELD

For the existing sources at the Bonanza Power Plant described in this application, compliance with the requirements of this permit is deemed compliance with the following laws, regulations, and legal requirements that have been specifically identified and set forth in Table H-1 of the permit or have been determined to be not applicable in Table H-2 of the permit:

40 CFR Parts 50, 51, 52, 53, 54, 55, 56, 57, 58, 59, 60, 61, 62, 63, 65, 66, 67, 69, 70, 71, 72, 73, 74, 75, 76, 79, 80, 81, 82 (subparts A, B, C, E and G), 85, 86, 87, 88, 93, 260, 261 and 266.

I

Appendix I

List of Exemptions Requested

EXEMPTIONS REQUESTED

Exemption Request:

J

Appendix J

Emissions Trading Information

EMISSIONS TRADING

Emissions allowance purchase is not anticipated for the Bonanza Power plant unless new regulations for the trading of NOx or other pollutants are promulgated. However, the selling of excess SO2 emission allowances may take place.

K

Appendix K

Compliance Plan and Schedule

Compliance Plan and Schedule

1. The Bonanza Power Plant will continue to comply with all applicable requirements as set forth in Table H-1 with which this source is in compliance. The methods for determing the compliance status of the Bonanza Power Plant with respect to all applicable requirements is outlined in Appendix G.

2. The Bonanza Power Plant will meet applicable and legal requirements that become effective during the permit term on a timely basis.

3. The Bonanza Power Plant will achieve compliance with any new applicable and legal requirements for which this source is not in compliance at the time of permit issuance.

Requested information for application;

A. **Identify applicable requirement for which compliance is not achieved:** All applicable requirements as set forth in Table H-1 are being met by the Bonanza Power Plant.

B. **Narrative description of how compliance will be achieved with this applicable requirement:** This is not applicable to the Bonanza Power Plant.

C. **Detailed schedule leading to compliance.** This is not applicable to the Bonanza Power Plant.

D. **Frequency for submittal of certified progress reports (6 month minimum):** This is not applicable to the Bonanza Power Plant.

L

Appendix L

Compliance Certification

Compliance Certification

1. **Schedule for the submission of compliance certification during the term of the permit: Frequency of submittal (annually at minimum):**

The Bonanza Power Plant will submit its Compliance Certification annually. The certification will be submitted by March 22 of each year.

M

Appendix M

Acid Rain Provisions

UNITED STATES ENVIRONMENTAL PROTECTION AGENCY
REGION VIII
999 18th STREET - SUITE 500
DENVER, COLORADO 80202-2466

November 18, 1997

Ref: 8P2-A

Stan Gordon, Manager
Bonanza Plant
Deseret Generation & Transmission Cooperative
8722 South 300 West
Sandy, UT 84070

Re: Phase II Acid Rain Permit for
Deseret Bonanza Plant

Dear Mr. Gordon:

Enclosed is a Federal acid rain Phase II permit and public notice for the Bonanza Plant, Unit 1-1, which our office discussed with you on November 13. A public notice will appear in the *Vernal Express* on November 19. A similar but less detailed public notice is scheduled to appear in the Federal Register on November 18.

We are aware that you have just sent a form to EPA Headquarters to change the Designated Representative from F. Elgin Ward to yourself. Unfortunately, the public notices went to print before we could incorporate that change, so F. Elgin Ward is still listed in the public notices as the D.R.

The permit action will be available for comment for 30 days from the date of each public notice. If we receive no significant adverse public comments, the permit will automatically become final ten days after the end of the public comment period. Otherwise, we will address the comments, notify you, and make a final decision based on all relevant comments. Please be aware that this Phase II permit does not supersede or void the Phase I acid rain permit for early NO_x election issued on April 16, 1997. If you have any questions, please contact Mr. Michael Owens of my staff, at (303) 312-6440.

Sincerely,

Richard R. Long
Director
Air Program

Enclosures (2)

Printed on Recycled Paper

ACID RAIN PROGRAM

PHASE II PERMIT

Bonanza Power Plant
Deseret Generation & Transmission Cooperative

PHASE II ACID RAIN PERMIT -- BONANZA PLANT

Issued to: Bonanza Power Plant
12500 East 25500 South
Vernal, UT 84078

ORIS code: 7790

Operated by: Deseret Generation & Transmission Cooperative
8722 South 300 West
Sandy, UT 84070

Effective: January 1, 1998 through December 31, 2002

This page will be replaced to document new EPA actions each time a new action is taken by the Agency. The following actions have been taken:

Summary of Previous Actions: None.

Present Action:

Notice of this permit action is being published in the Federal Register and in a local newspaper, the Vernal Express. A 30-day public comment period is allowed. If no significant adverse public comments are received, this permit automatically becomes final, 40 days after the later of the two publication dates.

For further information contact: Mike Owens, Air Program, U.S. EPA Region 8, (303) 312-6440, or owens.mike@epamail.epa.gov.

Kerrigan Clough 11/18/97
Signature *Date*

Kerrigan G. Clough
Assistant Regional Administrator
Office of Pollution Prevention, State & Tribal Assistance
U.S. Environmental Protection Agency, Region 8
999 18th Street, Suite 500
Denver, Colorado 80202-2466

Summary of Acid Rain Permit Contents:

1) Statement of Basis.

2) SO_2 allowances allocated under this permit and NO_x requirements for each affected unit. The affected unit at Bonanza is Unit 1-1.

3) Comments, notes and justifications regarding permit decisions and changes made to the permit application forms during the review process, and any additional requirements or conditions.

4) The Phase II Permit Application form and Phase II NO_x Compliance Plan form submitted by the permittee. The permittee must comply with the standard requirements and special provisions set forth in the application forms.

Statement of Basis:

Statutory and Regulatory Authorities: In accordance with titles IV and V of the Clean Air Act, U.S. EPA issues this permit pursuant to 40 CFR 72.74 in accordance with 40 CFR 72 subparts E and F.

Sulfur Dioxide Allowance Allocations and Nitrogen Oxide Phase II Requirements for Unit 1-1:

Year	1998	1999	2000	2001	2002
SO_2 allowances, under Table 2 of 40 CFR 73.10 *	N/A	N/A	10,709 tons	10,709 tons	10,709 tons
NO_x emission limit **	N/A	N/A	0.50 lb/MMBtu	0.50 lb/MMBtu	0.50 lb/MMBtu

* FOR SO_2: The number of allowances allocated to Phase II affected units by U.S. EPA may change in a 1998 revision to 40 CFR part 73 Tables 2, 3, and 4. In addition, the number of allowances actually held by an affected source in a unit account may differ from the number allocated by U.S. EPA under Tables 2, 3, or 4 of 40 CFR part 73. Neither of the aforementioned conditions necessitates a revision to the unit SO_2 allowance allocations identified in this permit. (See 40 CFR 72.84).

** FOR NO_x: Pursuant to 40 CFR 76.8(d)(2), U.S. EPA approves a NO_x early election compliance plan for Unit 1-1, under Phase II of the Acid Rain Program. Approval is effective January 1, 2000 through December 31, 2007, under which this unit's annual average NO_x emission rate for each year, determined using the methods and procedures specified in 40 CFR part 75, shall not exceed the applicable emission limitation, under 40 CFR 76.5(a), of 0.50 lb/MMBtu for dry bottom wall-fired units. If the unit is in compliance with its applicable emission limitation for each year of the plan, then the unit shall not be subject to the applicable emission limitation, under 40 CFR 76.7(a)(2), of 0.46 lb/MMBtu until January 1, 2008.

Comments, Notes and Justifications: U.S. EPA initially approved the NO_x early election compliance plan for Unit 1-1 by including it in a Phase I acid rain permit issued on April 16, 1997, pursuant to 40 CFR 76.8(d)(1)(ii). NO_x emission limits covering 1997 through 1999 are currently in effect under that permit, which expires on December 31, 1999. This Phase II acid rain permit does not supersede or void the Phase I permit.

Permit Application Forms: Attached.

United States
Environmental Protection Agency
Acid Rain Program

OMB No. 2060-0258
Expires 1-31-96

Phase II Permit Application

For more information, see instructions and refer to 40 CFR 72.30 and 72.31

This submission is: XNew ☐ Revised

STEP 1
Identify the source by plant name, State, and ORIS code from NADB

Plant Name	State	ORIS Code
BONANZA UNIT I	UT	7790

STEP 2
Enter the boiler ID# from NADB for each affected unit, and indicate whether a repowering plan is being submitted for the unit by entering "yes" or "no" at column c. For new units, enter the requested information in columns d and e

a	b	c	d	e
Boiler ID#	Compliance Plan: Unit Will Hold Allowances in Accordance with 40 CFR 72.9(c)(1)	Compliance Plan: Repowering Plan	New Units: Commence Operation Date	New Units: Monitor Certification Deadline
1-1	Yes	N/A	N/A	N/A
	Yes			
	Yes			
	Yes			
	Yes			
	Yes			
	Yes			
	Yes			
	Yes			
	Yes			
	Yes			

STEP 3
Check the box if the response in column c of Step 2 is "Yes" for any unit

☐ For each unit that will be repowered, the Repowering Extension Plan form is included and the Repowering Technology Petition form has been submitted or will be submitted by June 1, 1997.

BONANZA UNIT I

Plant Name (from Step 1)

STEP 4
Read the standard requirements and certification, enter the name of the designated representative, and sign and date

Standard Requirements

Permit Requirements.

(1) The designated representative of each affected source and each affected unit at the source shall:
(i) Submit a complete Acid Rain permit application (including a compliance plan) under 40 CFR part 72 in accordance with the deadlines specified in 40 CFR 72.30; and
(ii) Submit in a timely manner any supplemental information that the permitting authority determines is necessary in order to review an Acid Rain permit application and issue or deny an Acid Rain permit;
(2) The owners and operators of each affected source and each affected unit at the source shall:
(i) Operate the unit in compliance with a complete Acid Rain permit application or a superseding Acid Rain permit issued by the permitting authority; and
(ii) Have an Acid Rain Permit.

Monitoring Requirements.

(1) The owners and operators and, to the extent applicable, designated representative of each affected source and each affected unit at the source shall comply with the monitoring requirements as provided in 40 CFR parts 74, 75, and 76.
(2) The emissions measurements recorded and reported in accordance with 40 CFR part 75 shall be used to determine compliance by the unit with the Acid Rain emissions limitations and emissions reduction requirements for sulfur dioxide and nitrogen oxides under the Acid Rain Program.
(3) The requirements of 40 CFR parts 74 and 75 shall not affect the responsibility of the owners and operators to monitor emissions of other pollutants or other emissions characteristics at the unit under other applicable requirements of the Act and other provisions of the operating permit for the source.

Sulfur Dioxide Requirements.

(1) The owners and operators of each source and each affected unit at the source shall:
(i) Hold allowances, as of the allowance transfer deadline, in the unit's compliance subaccount (after deductions under 40 CFR 73.34(c)) not less than the total annual emissions of sulfur dioxide for the previous calendar year from the unit; and
(ii) Comply with the applicable Acid Rain emissions limitations for sulfur dioxide.
(2) Each ton of sulfur dioxide emitted in excess of the Acid Rain emissions limitations for sulfur dioxide shall constitute a separate violation of the Act.
(3) An affected unit shall be subject to the requirements under paragraph (1) of the sulfur dioxide requirements as follows:
(i) Starting January 1, 2000, an affected unit under 40 CFR 72.6(a)(2); or
(ii) Starting on the later of January 1, 2000 or the deadline for monitor certification under 40 CFR part 75, an affected unit under 40 CFR 72.6(a)(3).
(4) Allowances shall be held in, deducted from, or transferred among Allowance Tracking System accounts in accordance with the Acid Rain Program.
(5) An allowance shall not be deducted in order to comply with the requirements under paragraph (1)(i) of the sulfur dioxide requirements prior to the calendar year for which the allowance was allocated.
(6) An allowance allocated by the Administrator under the Acid Rain Program is a limited authorization to emit sulfur dioxide in accordance with the Acid Rain Program. No provision of the Acid Rain Program, the Acid Rain permit application, the Acid Rain permit, or the written exemption under 40 CFR 72.7 and 72.8 and no provision of law shall be construed to limit the authority of the United States to terminate or limit such authorization.
(7) An allowance allocated by the Administrator under the Acid Rain Program does not constitute a property right.

Nitrogen Oxides Requirements. The owners and operators of the source and each affected unit at the source shall comply with the applicable Acid Rain emissions limitation for nitrogen oxides.

Excess Emissions Requirements.

(1) The designated representative of an affected unit that has excess emissions in any calendar year shall submit a proposed offset plan, as required under 40 CFR part 77.
(2) The owners and operators of an affected unit that has excess emissions in any calendar year shall:
(i) Pay without demand the penalty required, and pay upon demand the interest on that penalty, as required by 40 CFR part 77; and
(ii) Comply with the terms of an approved offset plan, as required by 40 CFR part 77.

Recordkeeping and Reporting Requirements.

(1) Unless otherwise provided, the owners and operators of the source and each affected unit at the source shall keep on site at the source each of the following documents for a period of 5 years from the date the document is created. This period may be extended for cause, at any time prior to the end of 5 years, in writing by the Administrator or permitting authority:
(i) The certificate of representation for the designated representative for the source and each affected unit at the source and all documents that demonstrate the truth of the statements in the certificate of representation, in accordance with 40 CFR 72.24; provided that the certificate and documents shall be retained on site at the source beyond such 5-year period until such documents are superseded because of the submission of a new certificate of representation changing the designated representative;
(ii) All emissions monitoring information, in accordance with 40 CFR part 75;
(iii) Copies of all reports, compliance certifications, and other submissions and all records made or required under the Acid Rain Program; and,

BONANZA UNIT I
Plant Name (from Step 1)

Recordkeeping and Reporting Requirements (cont.)

(iv) Copies of all documents used to complete an Acid Rain permit application and any other submission under the Acid Rain Program or to demonstrate compliance with the requirements of the Acid Rain Program.

(2) The designated representative of an affected source and each affected unit at the source shall submit the reports and compliance certifications required under the Acid Rain Program, including those under 40 CFR part 72 subpart I and 40 CFR part 75.

Liability.

(1) Any person who knowingly violates any requirement or prohibition of the Acid Rain Program, a complete Acid Rain permit application, an Acid Rain permit, or a written exemption under 40 CFR 72.7 or 72.8, including any requirement for the payment of any penalty owed to the United States, shall be subject to enforcement pursuant to section 113(c) of the Act.
(2) Any person who knowingly makes a false, material statement in any record, submission, or report under the Acid Rain Program shall be subject to criminal enforcement pursuant to section 113(c) of the Act and 18 U.S.C. 1001.
(3) No permit revision shall excuse any violation of the requirements of the Acid Rain Program that occurs prior to the date that the revision takes effect.
(4) Each affected source and each affected unit shall meet the requirements of the Acid Rain Program.
(5) Any provision of the Acid Rain Program that applies to an affected source (including a provision applicable to the designated representative of an affected source) shall also apply to the owners and operators of such source and of the affected units at the source.
(6) Any provision of the Acid Rain Program that applies to an affected unit (including a provision applicable to the designated representative of an affected unit) shall also apply to the owners and operators of such unit. Except as provided under 40 CFR 72.44 (Phase II repowering extension plans) and 40 CFR 76.11 (NO_x averaging plans), and except with regard to the requirements applicable to units with a common stack under 40 CFR part 75 (including 40 CFR 75.16, 75.17, and 75.18), the owners and operators and the designated representative of one affected unit shall not be liable for any violation by any other affected unit of which they are not owners or operators or the designated representative and that is located at a source of which they are not owners or operators or the designated representative.
(7) Each violation of a provision of 40 CFR parts 72, 73, 74, 75, 76, 77, and 78 by an affected source or affected unit, or by an owner or operator or designated representative of such source or unit, shall be a separate violation of the Act.

Effect on Other Authorities. No provision of the Acid Rain Program, an Acid Rain permit application, an Acid Rain permit, or a written exemption under 40 CFR 72.7 or 72.8 shall be construed as:

(1) Except as expressly provided in title IV of the Act, exempting or excluding the owners and operators and, to the extent applicable, the designated representative of an affected source or affected unit from compliance with any other provision of the Act, including the provisions of title I of the Act relating to applicable National Ambient Air Quality Standards or State Implementation Plans;
(2) Limiting the number of allowances a unit can hold; *provided*, that the number of allowances held by the unit shall not affect the source's obligation to comply with any other provisions of the Act;
(3) Requiring a change of any kind in any State law regulating electric utility rates and charges, affecting any State law regarding such State regulation, or limiting such State regulation, including any prudence review requirements under such State law;
(4) Modifying the Federal Power Act or affecting the authority of the Federal Energy Regulatory Commission under the Federal Power Act; or,
(5) Interfering with or impairing any program for competitive bidding for power supply in a State in which such program is established.

Certification

I am authorized to make this submission on behalf of the owners and operators of the affected source or affected units for which the submission is made. I certify under penalty of law that I have personally examined, and am familiar with, the statements and information submitted in this document and all its attachments. Based on my inquiry of those individuals with primary responsibility for obtaining the information, I certify that the statements and information are to the best of my knowledge and belief true, accurate, and complete. I am aware that there are significant penalties for submitting false statements and information or omitting required statements and information, including the possibility of fine or imprisonment.

Name: Gary Richins, Alternate Designated Representative	
Signature: G Richins	Date: 12/20/95

STEP 5 (optional)
Enter the source AIRS and FINDS identification numbers, if known

RECEIVED

MAY 2 9 1997

Air Quality

United States
Environmental Protection Agency
Acid Rain Program

OMB No. 2060-0258
Expires 1-31-99

Phase II NO_x Compliance Plan

For more information, see instructions and refer to 40 CFR 76.9

This submission is: ☒ New ☐ Revised

STEP 1
Indicate plant name, State, and ORIS code from NADB, if applicable

Plant Name	State	ORIS Code
Bonanza Unit 1	UT	07790

STEP 2

Identify each affected Group 1 and Group 2 boiler using the boiler ID# from NADB, if applicable. Indicate boiler type: "CB" for cell burner, "CY" for cyclone, "DBW" for dry bottom wall-fired, "T" for tangentially fired, "V" for vertically fired, and "WB" for wet bottom. Indicate the compliance option selected for each unit.

	ID# 1-1	ID#	ID#	ID#	ID#	ID#
	Type DBW	Type	Type	Type	Type	Type
(a) Standard annual average emission limitation of 0.50 lb/mmBtu (for Phase I dry bottom wall-fired boilers)	☒	☐	☐	☐	☐	☐
(b) Standard annual average emission limitation of 0.45 lb/mmBtu (for Phase I tangentially fired boilers)	☐	☐	☐	☐	☐	☐
(c) EPA-approved early election in under 40 CFR 76.8 through 12/31/07 (also indicate above emission limit specified in plan)	☒	☐	☐	☐	☐	☐
(d) Standard annual average emission limitation of 0.46 lb/mmBtu (for Phase II dry bottom wall-fired boilers)	☒	☐	☐	☐	☐	☐
(e) Standard annual average emission limitation of 0.40 lb/mmBtu (for Phase II tangentially fired boilers)	☐	☐	☐	☐	☐	☐
(f) Standard annual average emission limitation of 0.68 lb/mmBtu (for cell burner boilers)	☐	☐	☐	☐	☐	☐
(g) Standard annual average emission limitation of 0.86 lb/mmBtu (for cyclone boilers)	☐	☐	☐	☐	☐	☐
(h) Standard annual average emission limitation of 0.80 lb/mmBtu (for vertically fired boilers)	☐	☐	☐	☐	☐	☐
(i) Standard annual average emission limitation of 0.84 lb/mmBtu (for wet bottom boilers)	☐	☐	☐	☐	☐	☐
(j) NO_x Averaging Plan (include NO_x Averaging form)	☐	☐	☐	☐	☐	☐
(k) Common stack pursuant to 40 CFR 76.17(a)(2)(i)(A) (check the standard emission limitation box above for most stringent limitation applicable to any unit utilizing stack)	☐	☐	☐	☐	☐	☐
(l) Common stack pursuant to 40 CFR 76.17(a)(2)(i)(B) with NO_x Averaging (check the NO_x Averaging Plan box and include NO_x Averaging form)	☐	☐	☐	☐	☐	☐

Plant Name (from Step 1) Bonanza Unit 1

STEP 2, cont'd.

	ID# / Type	ID# / Type	ID# / Type	ID# / Type	ID# / Type	ID# / Type
(m) EPA-approved common stack apportionment method pursuant to 40 CFR 76.17 (a)(2)(i)(C), (a)(2)(iii)(B), or (b)(2)	☐	☐	☐	☐	☐	☐
(n) AEL (include Phase II AEL Demonstration Period, Final AEL Petition, or AEL Renewal form as appropriate)	☐	☐	☐	☐	☐	☐
(o) Petition for AEL demonstration period or final AEL under review by U.S. EPA or demonstration period ongoing	☐	☐	☐	☐	☐	☐
(p) Repowering extension plan approved or under review	☐	☐	☐	☐	☐	☐

STEP 3
Read the standard requirements and certification, enter the name of the designated representative, sign &

Standard Requirements

General. This source is subject to the standard requirements in 40 CFR 72.9 (consistent with 40 CFR 76.8(e)(1)(i)). These requirements are listed in this source's Acid Rain Permit.

Special Provisions for Early Election Units

Nitrogen Oxides. A unit that is governed by an approved early election plan shall be subject to an emissions limitation for NO_x as provided under 40 CFR 76.8(a)(2) except as provided under 40 CFR 76.8(e)(3)(ii).
Liability. The owners and operators of a unit governed by an approved early election plan shall be liable for any violation of the plan or 40 CFR 76.8 at that unit. The owners and operators shall be liable, beginning January 1, 2000, for fulfilling the obligations specified in 40 CFR Part 77.
Termination. An approved early election plan shall be in effect only until the earlier of January 1, 2008 or January 1 of the calendar year for which a termination of the plan takes effect. If the designated representative of the unit under an approved early election plan fails to demonstrate compliance with the applicable emissions limitation under 40 CFR 76.5 for any year during the period beginning January 1 of the first year the early election takes effect and ending December 31, 2007, the permitting authority will terminate the plan. The termination will take effect beginning January 1 of the year after the year for which there is a failure to demonstrate compliance, and the designated representative may not submit a new early election plan. The designated representative of the unit under an approved early election plan may terminate the plan any year prior to 2008 but may not submit a new early election plan. In order to terminate the plan, the designated representative must submit a notice under 40 CFR 72.40(d) by January 1 of the year for which the termination is to take effect. If an early election plan is terminated any year prior to 2000, the unit shall meet, beginning January 1, 2000, the applicable emissions limitation for NO_x for Phase II units with Group 1 boilers under 40 CFR 76.7. If an early election plan is terminated on or after 2000, the unit shall meet, beginning on the effective date of the termination, the applicable emissions limitation for NO_x for Phase II units with Group 1 boilers under 40 CFR 76.7.

Certification

I am authorized to make this submission on behalf of the owners and operators of the affected source or affected units for which the submission is made. I certify under penalty of law that I have personally examined, and am familiar with, the statements and information submitted in this document and all its attachments. Based on my inquiry of those individuals with primary responsibility for obtaining the information, I certify that the statements and information are to the best of my knowledge and belief true, accurate, and complete. I am aware that there are significant penalties for submitting false statements and information or omitting required statements and information, including the possibility of fine or imprisonment.

Name Gary H. Richins, Alternate Designated Representative

Signature Gary H Richins Date 5/28/97

THIS WILL APPEAR IN THE "VERNAL EXPRESS" ON NOV. 19, 1997.

UNITED STATES ENVIRONMENTAL PROTECTION AGENCY

NOTICE OF ACID RAIN PERMIT ISSUANCE AND OPPORTUNITY FOR PUBLIC COMMENT

The Region 8 office of the United States Environmental Protection Agency (US EPA) is seeking public comment on a Federal Phase II Acid Rain Program permit being issued to the following power plant in Utah:

Bonanza Power Plant, Unit 1-1
Operator: Deseret Generation & Transmission Cooperative
Uintah County

The designated representative for the plant is Mr. F. Elgin Ward. Authority for permit issuance is in Part 72 of Title 40 of the Code of Federal Regulations, at 40 CFR 72.74, pursuant to the Acid Rain Program provisions of the 1990 Federal Clean Air Act. Issuance of this permit does not affect the plant owner/operator's responsibility to meet all other existing local, state, and Federal air pollution control program requirements.

Starting in the year 2000, plants subject to Phase II of Acid Rain Program, including the Bonanza plant, are required to hold sufficient sulfur dioxide (SO_2) emission allowances, under 40 CFR 72.9(c)(1), to comply with Acid Rain Program requirements. The initial allowance allocation from US EPA, in 40 CFR 73.10, is 10,709 annual SO_2 allowances. An "allowance" is an authorization by US EPA to emit one ton of SO_2. Compliance requirements for SO_2 are incorporated into this Phase II acid rain permit.

The Bonanza plant is also subject to an emission limit under Acid Rain Program for nitrogen oxides (NO_x). This Phase II permit approves a NO_x early election compliance plan, starting with the year 2000, under which the NO_x emission limit is 0.50 pounds of NO_x emissions per million British thermal units of heat input to the boiler.

U.S. EPA initially approved the NO_x early election compliance plan for the Bonanza plant by including it in a Phase I acid rain permit issued on April 16, 1997. NO_x emission limits for 1997 through 1999 are currently in effect under that permit, which expires on December 31, 1999. This Phase II acid rain permit does not supersede or void the Phase I permit. Because the early election compliance plan has already undergone public notice and comment and has been approved by US EPA under Phase I, that portion of this Phase II permit is not subject to public comment.

Any comments on this Phase II acid rain permit must be submitted to US EPA within 30 days after the date this notice is published, or within 30 days after the date on which similar notice

is published in the Federal Register, whichever is later. If no significant adverse comments are received, the permit will automatically become final on the 40th day after the later of the two publication dates. If significant adverse comments are received, the permit will be treated by US EPA as a draft permit and all comments will be addressed in a subsequent final action.

Any person may request a public hearing on the permit action. The request must be submitted to US EPA within 15 days after the date this notice is published, or within 15 days after the date on which similar notice is published in the Federal Register, whichever is later. The requestor must state the issues proposed to be raised by that person in the hearing. If US EPA determines that a hearing will clarify significant issues affecting the permit issuance, a hearing will be announced.

The administrative record for this permit action may be viewed between 8:30 a.m. and 5:00 p.m. on weekdays at US EPA Region 8, Air Program Office (Attention: Michael Owens), 3rd floor, 999 18th Street, Denver, Colorado 80202-2466.

Send any comments, requests for a public hearing, and requests to receive notice of any future action on this permit, to:

USEPA R8 (8P2-A/MIKE OWENS)
999 18TH ST STE 500
DENVER CO 80202-2466

For further information on this permit action, contact Mr. Owens at the above US EPA address, or call (303) 312-6440.