February 15, 2012

Synthetic Minor Limit Application
Jicarilla Compressor Station
Jicarilla Apache Nation
Rio Arriba County, NM

RECEIVED
12 FEB 22 PM 5: 19
AIR PERMITS SECTION
6PD-R

Via FedEx 2 Day Mail: 7980 6332 7590

Bonnie Braganza
US EPA Region 6
Air Permits Section
1445 Ross Avenue, Suite 1200
Dallas, Texas 75202-2733

Ms. Braganza:

XTO Energy, Inc. (XTO) respectfully submits this Synthetic Minor Limit application to authorize emissions at the Jicarilla Compressor Station (the Station) located southwest of Aztec in Rio Arriba County, New Mexico. XTO has determined that the Station is both synthetic minor for PSD and Title V. The Station consists of two (2) compressor engines, one (1) glycol dehydration unit, two (2) condensate tanks, four (4) produced water tanks, four (4) heaters, a truck loading rack, and piping components. The Station and its associated air emissions qualify for a Synthetic Minor Limit under 40 Code of Federal Register (CFR) Part 49 Review of New Sources and Modifications in Indian Country.

This application includes the following attachments:

- Attachment 1 - EPA Forms;
- Attachment 2 - Site Data;
- Attachment 3 - Emission Rate Calculations;
- Attachment 4 - Regulatory Applicability;
- Attachment 5 - SCREEN3 Modeling;
- Attachment 6 - ESA and NHPA study; and
- Attachment 7 -Supporting Documentation.

We would like to thank you in advance for your review and concurrence with this Synthetic Minor Limit application. Should you have any questions, please feel free to contact me at 817-885-2845 or via e-mail at Clare_Hoang@xtoenergy.com.

Sincerely,

Clare Hoang
Environmental Engineer
XTO Energy Inc.

SYNTHETIC MINOR LIMIT

XTO Energy, Inc.
Jicarilla Compressor Station
Rio Arriba County, New Mexico

Project No. 229-32

February 2012

ATTACHMENT 1

SYNTHETIC MINOR LIMIT APPLICATION

JICARILLA COMPRESSOR STATION

XTO ENERGY, INC.

United States Environmental Protection Agency	US EPA Region 6
Program	Air Permits Section
Address	1445 Ross Avenue, Suite 1200
	Dallas, Texas 75202-2733
Phone	Phone: 214 -665-7340
Fax	Fax: 214-665-6762
Web address	

FEDERAL MINOR NEW SOURCE REVIEW PROGRAM IN INDIAN COUNTRY

Application for New Construction

(Form NEW)

Please check all that apply to show how you are using this form:

- ☐ **Proposed Construction of a New Source**
- ☐ **Proposed Construction of New Equipment at an Existing Source**
- ☐ **Proposed Modification of an Existing Source**
- ☑ **Other – Please Explain**

XTO Energy, Inc. acquired this existing site, Jicarilla Compressor Station, and is requesting a New Source Review Synthetic Minor Limit in accordance with 40 CFR Part 49 Review of New Sources and Modifications in Indian Country.

Please submit information to:

US EPA Region 6
Air Permits Section
1445 Ross Avenue, Suite 1200
Dallas, Texas 75202-2733
Phone: 214 -665-7340
Fax: 214-665-6762

A. GENERAL SOURCE INFORMATION

1. (a) **Company Name** XTO Energy, Inc. (b) **Operator Name**	2. **Source Name** Jicarilla Compressor Station
3. Type of Operation Oil and Gas Facility	4. Portable Source? ☐ Yes ☑ No 5. Temporary Source? ☐ Yes ☑ No
6. NAICS Code 211111	7. SIC Code 1311

8. Physical Address (home base for portable sources)
At the intersection of US-550N and NM-537, turn right (north) onto NM-537 for 28 miles. Turn left (west) onto BIA-J6 for 8.4 miles. Turn right (north) onto unpaved road for 2.4 miles, site on left.

9. Reservation*	10. County*	11a. Latitude*	11b. Longitude*
Jicarilla Apache Nation	Rio Arriba	36.43905	-107.34797
12a. Quarter Quarter Section*	12b. Section*	12c. Township*	12d. Range*
SE1/4,SW1/4	S34	T26N	R5W

*Provide all proposed locations of operation for portable sources

EPA Form No. 5900-248

B. PREVIOUS PERMIT ACTIONS (Provide information in this format for each permit that has been issued to this source. Provide as an attachment if additional space is necessary)

Source Name on the Permit
Permit Number (xx-xxx-xxxxx-xxxx.xx)
Date of the Permit Action

Source Name on the Permit
Permit Number (xx-xxx-xxxxx-xxxx.xx)
Date of the Permit Action

Source Name on the Permit
Permit Number (xx-xxx-xxxxx-xxxx.xx)
Date of the Permit Action

Source Name on the Permit
Permit Number (xx-xxx-xxxxx-xxxx.xx)
Date of the Permit Action

Source Name on the Permit
Permit Number (xx-xxx-xxxxx-xxxx.xx)
Date of the Permit Action

C. CONTACT INFORMATION

Company Contact Clare Hoang	Title Environmental Engineer
Mailing Address 810 W Houston Street, Fort Worth, TX 76102	
Email Address clare_hoang@xtoenergy.com	
Telephone Number 817-885-2845	Facsimile Number 817-885-2379
Operator Contact (if different from company contact) Wes Tucker	Title Area Superintendent
Mailing Address 382 Road 3100, Aztec, NM 87410	
Email Address wes_tucker@xtoenergy.com	
Telephone Number 505-333-3520	Facsimile Number 505-333-3521
Source Contact Wes Tucker	Title
Mailing Address same as above	
Email Address	
Telephone Number	Facsimile Number
Compliance Contact Clare Hoang	Title
Mailing Address same as above	
Email Address	
Telephone Number	Facsimile Number

D. ATTACHMENTS Please see the following page for attachment location comments

Include all of the following information (see the attached instructions)

☑ **FORM SYNMIN** - New Source Review Synthetic Minor Limit Request Form, if synthetic minor limits are being requested.

☑ Narrative description of the proposed production processes. This description should follow the flow of the process flow diagram to be submitted with this application.

☑ Process flow chart identifying all proposed processing, combustion, handling, storage, and emission control equipment.

☑ A list and descriptions of all proposed emission units and air pollution-generating activities.

☑ Type and quantity of fuels, including sulfur content of fuels, proposed to be used on a daily, annual and maximum hourly basis.

☑ Type and quantity of raw materials used or final product produced proposed to be used on a daily, annual and maximum hourly basis.

☑ Proposed operating schedule, including number of hours per day, number of days per week and number of weeks per year.

☑ A list and description of all proposed emission controls, control efficiencies, emission limits, and monitoring for each emission unit and air pollution generating activity.

☑ **Criteria Pollutant Emissions** - Estimates of Current Actual Emissions, Current Allowable Emissions, Post-Change Uncontrolled Emissions, and Post-Change Allowable Emissions for the following air pollutants: particulate matter, PM_{10}, $PM_{2.5}$, sulfur oxides (SOx), nitrogen oxides (NOx), carbon monoxide (CO), volatile organic compound (VOC), lead (Pb) and lead compounds, fluorides (gaseous and particulate), sulfuric acid mist (H_2SO_4), hydrogen sulfide (H_2S), total reduced sulfur (TRS) and reduced sulfur compounds, including all calculations for the estimates.

These estimates are to be made for each emission unit, emission generating activity, and the project/source in total.

☑ **Modeling – Air Quality Impact Analysis (AQIA)**

☑ **ESA (Endangered Species Act)**

☑ **NHPA (National Historic Preservation Act)**

E. TABLE OF ESTIMATED EMISSIONS

The following tables provide the total emissions in tons/year for all pollutants from the calculations required in Section D of this form, as appropriate for the use specified at the top of the form.

E(i) – Proposed New Source

Pollutant	Potential Emissions (tpy)	Proposed Allowable Emissions (tpy)	
PM	0.7	0.7	PM - Particulate Matter PM_{10} - Particulate Matter less than 10 microns in size $PM_{2.5}$ - Particulate Matter less than 2.5 microns in size SOx - Sulfur Oxides NOx - Nitrogen Oxides CO - Carbon Monoxide VOC - Volatile Organic Compound Pb - Lead and lead compounds Fluorides - Gaseous and particulates H_2SO_4 - Sulfuric Acid Mist H_2S - Hydrogen Sulfide TRS - Total Reduced Sulfur RSC - Reduced Sulfur Compounds
PM_{10}	0.7	0.7	
$PM_{2.5}$	0.7	0.7	
SO_x	<0.1	<0.1	
NO_x	37.1	37.1	
CO	49.1	49.1	
VOC	39.4	39.4	
Pb	--	--	
Fluorides	--		
H_2SO_4	--		
H_2S	--		
TRS	--		
RSC	--		

Emissions calculations must include fugitive emissions if the source is one the following listed sources, pursuant to CAA Section 302(j):

(a) Coal cleaning plants (with thermal dryers);
(b) Kraft pulp mills;
(c) Portland cement plants;
(d) Primary zinc smelters;
(e) Iron and steel mills;
(f) Primary aluminum ore reduction plants;
(g) Primary copper smelters;
(h) Municipal incinerators capable of charging more than 250 tons of refuse per day;
(i) Hydrofluoric, sulfuric, or nitric acid plants;
(j) Petroleum refineries;
(k) Lime plants;
(l) Phosphate rock processing plants;
(m) Coke oven batteries;
(n) Sulfur recovery plants;
(o) Carbon black plants (furnace process);
(p) Primary lead smelters;
(q) Fuel conversion plants;
(r) Sintering plants;
(s) Secondary metal production plants;
(t) Chemical process plants
(u) Fossil-fuel boilers (or combination thereof) totaling more than 250 million British thermal units per hour heat input;
(v) Petroleum storage and transfer units with a total storage capacity exceeding 300,000 barrels;
(w) Taconite ore processing plants;
(x) Glass fiber processing plants;
(y) Charcoal production plants;
(z) Fossil fuel-fired steam electric plants of more that 250 million British thermal units per hour heat input, and
(aa) Any other stationary source category which, as of August 7, 1980, is being regulated under section 111 or 112 of the Act.

E(ii) – Proposed New Construction at an Existing Source or Modification of an Existing Source

Pollutant	Current Actual Emissions (tpy)	Current Allowable Emissions (tpy)	Post-Change Potential Emissions (tpy)	Post-Change Allowable Emissions (tpy)
PM	Not a modification			
PM_{10}				
$PM_{2.5}$				
SO_x				
NO_x				
CO				
VOC				
Pb				
Fluorides				
H_2SO_4				
H_2S				
TRS				
RSC				

PM - Particulate Matter
PM_{10} - Particulate Matter less than 10 microns in size
$PM_{2.5}$ - Particulate Matter less than 2.5 microns in size
SOx - Sulfur Oxides
NOx - Nitrogen Oxides
CO - Carbon Monoxide
VOC - Volatile Organic Compound
Pb - Lead and lead compounds
Fluorides - Gaseous and particulates
H_2SO_4 - Sulfuric Acid Mist
H_2S - Hydrogen Sulfide
TRS - Total Reduced Sulfur
RSC - Reduced Sulfur Compounds

[Disclaimers] The public reporting and recordkeeping burden for this collection of information is estimated to average 20 hours per response, unless a modeling analysis is required. If a modeling analysis is required, the public reporting and recordkeeping burden for this collection of information is estimated to average 60 hours per response .Send comments on the Agency's need for this information, the accuracy of the provided burden estimates, and any suggested methods for minimizing respondent burden, including through the use of automated collection techniques to the Director, Collection Strategies Division, U.S. Environmental Protection Agency (2822T), 1200 Pennsylvania Ave., NW, Washington, D.C. 20460. Include the OMB control number in any correspondence. Do not send the completed form to this address.

XTO Energy, Inc.
Jicarilla Compressor Station
Application for New Source Review (NSR)
Attachment Checklist

FORM SYNMIN - New Source Review Synthetic Minor Limit Request Form, if synthetic minor limits are being requested. **Please see the form is included in Attachment 1 of this application**

Narrative description of the proposed production processes. This description should follow the flow of the process flow diagram to be submitted with this application. **Please see Attachment 2 Project/Process Description and Figure 2-1 Process Flow Diagram**

Process flow chart identifying all proposed processing, combustion, handling, storage, and emission control equipment. **Please see Figure 2-1**

A list and descriptions of all proposed emission units and air pollution-generating activities. **Please see Attachment 2 Process/Project Description**

Type and quantity of fuels, including sulfur content of fuels, proposed to be used on a daily, annual and Maximum hourly basis. **Please see Attachment 7 Supporting Documentation Site Data**

Type and quantity of raw materials used or final product produced proposed to be used on a daily, annual and maximum hourly basis. **Please see Attachment 7 Supporting Documentation Site Data**

Proposed operating schedule, including number of hours per day, number of days per week and number of weeks per year. **The Jicarilla Compressor Station potential to emit operating schedule is based on 8760 hrs/year.**

A list and description of all proposed emission controls, control efficiencies, emission limits, and monitoring for each emission unit and air pollution generating activity. **Please see the Attachment 3 Calculations and Attachment 4 Regulatory Applicability**

Criteria Pollutant Emissions - Estimates of Current Actual Emissions, Current Allowable Emissions, Post-Change Uncontrolled Emissions, and Post-Change Allowable Emissions for the following air pollutants: particulate matter, PM_{10}, $PM_{2.5}$, sulfur oxides (SOx), nitrogen oxides (NOx), carbon monoxide (CO), volatile organic compound (VOC), lead (Pb) and lead compounds, fluorides (gaseous and particulate), sulfuric acid mist (H_2SO_4), hydrogen sulfide (H_2S), total reduced sulfur (TRS) and reduced sulfur compounds, including all calculations for the estimates. These estimates are to be made for each emission unit, emission generating activity, and the project/source in total. **A Synthetic Minor Limit is being requested in accordance with 40 CFR Part 49 Review of New Sources and Modification in Indian Country. Please see the Current Allowable Emissions calculated as Potential to Emit in Attachment 3. Also, there are no Post-Change Uncontrolled or Post –Change Allowable Emissions since the site is not making a modification.**

Modeling – Air Quality Impact Analysis (AQIA) **Please see Attachment 5**

ESA (Endangered Species Act) and NHPA (National Historic Preservation Act) **Please see Attachment 6**

United States Environmental Protection Agency Program Address Phone Fax Web address	US EPA Region 6 Air Permits Section 1445 Ross Avenue, Suite 1200 Dallas, Texas 75202-2733 Phone: 214 -665-7340 Fax: 214-665-6762

FEDERAL MINOR NEW SOURCE REVIEW PROGRAM IN INDIAN COUNTRY

Application For Synthetic Minor Limit
(Form SYNMIN)

Please submit information to:

US EPA Region 6
Air Permits Section
1445 Ross Avenue, Suite 1200
Dallas, Texas 75202-2733
Phone: 214 -665-7340

A. GENERAL INFORMATION

Company Name XTO Energy, Inc.	Source Name Jicarilla Compressor Station
Company Contact or Owner Name Clare Hoang	Title Environmental Engineer
Mailing Address 810 W Houston Street, Fort Worth, TX 76102	
Email Address clare_hoang@xtoenergy.com	
Telephone Number 817-885-2845	Facsimile Number 817-885-2379

B. ATTACHMENTS

Please see the following page for attachment location comments

For each criteria air pollutant, hazardous air pollutant and for all emission units and air pollutant-generating activities to be covered by a limitation, include the following:

- ☑ Item 1 - The proposed limitation and a description of its effect on current actual, allowable and the potential to emit.
- ☑ Item 2 - The proposed testing, monitoring, recordkeeping, and reporting requirements to be used to demonstrate and assure compliance with the proposed limitation.
- ☑ Item 3 - The type and quantity of fuels and/or raw materials used.
- ☑ Item 4 - A description of estimated efficiency of air pollution control equipment under present or anticipated operating conditions, including documentation of the manufacturer specifications and guarantees.
- ☑ Item 5 - Estimates of the Current Actual Emissions, Current Allowable Emissions including all calculations for the estimates, where applicable.
- ☑ Item 6 - Estimates of the Post-Change Allowable Emissions that would result from compliance with the proposed limitation, including all calculations for the estimates.
- ☑ Item 7 – Estimates of the potential emissions of Greenhouse Gas (GHG) pollutants:

XTO Energy, Inc.
Jicarilla Compressor Station
Application for Synthetic Minor Limit
Attachment Checklist

Item 1 - The proposed limitation and a description of its effect on current actual, allowable and the potential to emit. **Please see Attachment 2 Project/Process Description**

Item 2 - The proposed testing, monitoring, recordkeeping, and reporting requirements to be used to demonstrate and assure compliance with the proposed limitation. **Please see Attachment 4 Regulatory Applicability**

Item 3 - The type and quantity of fuels and/or raw materials used. **Please see Attachment 7 Supporting Documentation Site Data**

Item 4 - A description of estimated efficiency of air pollution control equipment under present or anticipated operating conditions, including documentation of the manufacturer specifications and guarantees. **Please see Attachment 2's Project/Process Description and Attachment 7 Supporting Documentation**

Item 5 - Estimates of the Current Actual Emissions, Current Allowable Emissions including all calculations for the estimates, where applicable. **Please see Attachment 3 Calculations**

Item 6 - Estimates of the Post-Change Allowable Emissions that would result from compliance with the proposed limitation, including all calculations for the estimates. **This application is for an existing site on tribal land requesting a synthetic minor permit limit. Modifications are not proposed, and the site's Current Allowable Emissions/Potential to Emit calculations are presented in Attachment 3.**

Item 7 – Estimates of the potential emissions of Greenhouse Gas (GHG) pollutants: **Please see Attachment 3 Calculations**

ATTACHMENT 2

PROCESS/PROJECT DESCRIPTION

SYNTHETIC MINOR LIMIT APPLICATION

JICARILLA COMPRESSOR STATION

XTO ENERGY, INC.

ATTACHMENT 1
PROCESS/PROJECT DESCRIPTION

Process Description

XTO Energy, Inc. is submitting this Synthetic Minor Limit application for the Jicarilla Compressor Station (the Station) located southeast of Aztec in Rio Arriba County, New Mexico.

The Station is comprised of two (2) compressor engines and associated blowdowns, one (1) glycol dehydration unit, two (2) condensate tanks, four (4) produced water tanks, four (4) heaters, truck loading rack, and piping components. Figure 2-1 is a process flow diagram of the Station showing emission points.

Sweet natural gas enters the Station via a pressurized inlet separator. Due to pressure drop, the liquefiable portion of the stream drops out in the separator and is routed to the four (4) atmospheric storage tanks [referred to as "condensate" tanks, (FINs) TK1 & TK2 and "produced water" tanks, (FINs) TK3 & TK4]. The produced water tanks also receive scrubber dumps off the engines. Liquids from these tanks are periodically collected by tank truck and sent offsite. The inlet gas and condensate compositions are found in the Site Data table in Attachment 7.

The gaseous stream from the inlet separator is routed to two (2) reciprocating internal combustion engine-driven compressors [(FINs) E1 through E2] and is compressed prior to the dehydration process.

After dehydrating [(FIN) DEHY-1] the gas stream, rich glycol (water saturated) is routed to the flash tank, where flashed vapors are sent to the reboiler as fuel. The remaining rich glycol is routed into the glycol regenerator column where the entrained water and other constituents are removed, and lean glycol is circulated back into the dehydration column. The regenerator overhead vent is routed to the flare with a 98% control efficiency. The condensable liquids are routed to the two (2) produced water tanks, [(FINs) TK5 & TK6]. The dehydrated pipeline quality natural gas exits the Station via a pipeline.

Heaters are used for the separator, tanks, and dehydration reboiler, [(FINs) H1-H4]. The Station operates 8760 hrs per year.

Please see the following tables describing the existing emission units:

Reciprocating Internal Combustion Engine-Driven Compressors

Engine No.	Description	Construction Date	Fuel Fired	Rated Capacity (hp)	Max Firing Rate			Manufacturer	Serial#
					MMBTU/yr	MMBTU/day	MMBTU/ hr		
E1	Caterpillar 3512	6/19/2003	Fuel Gas	1004	62,371	171	7.12	Caterpillar	SN 7NJ00929
E2	Caterpillar 3512	6/25/2003	Fuel Gas	1004	62,371	171	7.71	Caterpillar	SN 7NJ00932

Dehydration Unit

Unit No.	Description	Construction Date	Max Throughput (MMSCF/D)	Manufacturer	Control Equipment
DEHY-1	TEG Dehydrator	Pre 7/2002	4.5	Pesco	Flare

Tanks

Unit ID	Description	Content	Construction Date	Design Capacity (BBL)	Max Throughput		
					BBL/yr	BBL/day	BBL/hr
TK1	Condensate Tank	Condensate from inlet Separator	Pre 7/2002	400	1460	4	0.17
TK2	Condensate Tank	Condensate from inlet Separator	Pre 7/2002	400	1460	4	0.17
TK3	Produced Water	Produced Water from Inlet Separator & Engine Scrubber	Pre 7/2002	100	1460	4	0.17
TK4	Produced Water	Produced Water from Inlet Separator & Engine Scrubber	Pre 7/2002	100	1460	4	0.17
TK5	Produced Water	Produced Water from Dehy	Pre 7/2002	30	365	1	0.04
TK6	Produced Water	Produced Water from Dehy	Pre 7/2002	30	365	1	0.04

Heaters

Heater No.	Description	Construction Date	Fuel Fired	Design Heat Capacity based on LHV		
				MMBTU/yr	MMBTU/day	MMBTU/hr
H1	Tank Heater	Pre 7/2002	Fuel Gas	4380..00	12	0.5
H2	Tank Heater	Pre 7/2003	Fuel Gas	4,380.00	12	0.5
H3	Separator Heater	Pre 7/2004	Fuel Gas	4,380.00	12	0.5
H4	Dehy Heater	Pre 7/2005	Fuel Gas	8760.00	24	1.0

Project Description

XTO Energy, Inc. is submitting this Synthetic Minor Limit application to authorize the operations of the Jicarilla Compressor Station. The Station's dehydration unit [Facility Identification Number (FIN) DEHY-1] is subject to 40 CFR §63, Subpart HH. The Station's dehydration regeneration still vent gas emission rates are controlled by a flare. The site emissions are below major source thresholds after dehydration unit controls.

The Station's Compressor Engines, [Facility Identification Number (FIN) E1 & E2], are subject to 40 CFR §63, Subpart ZZZZ, area source provisions. The engine's regulatory applicability is shown in Attachment 4.

Attachment 3 contains emission rate calculations and summarizes the Station's potential emission rates.

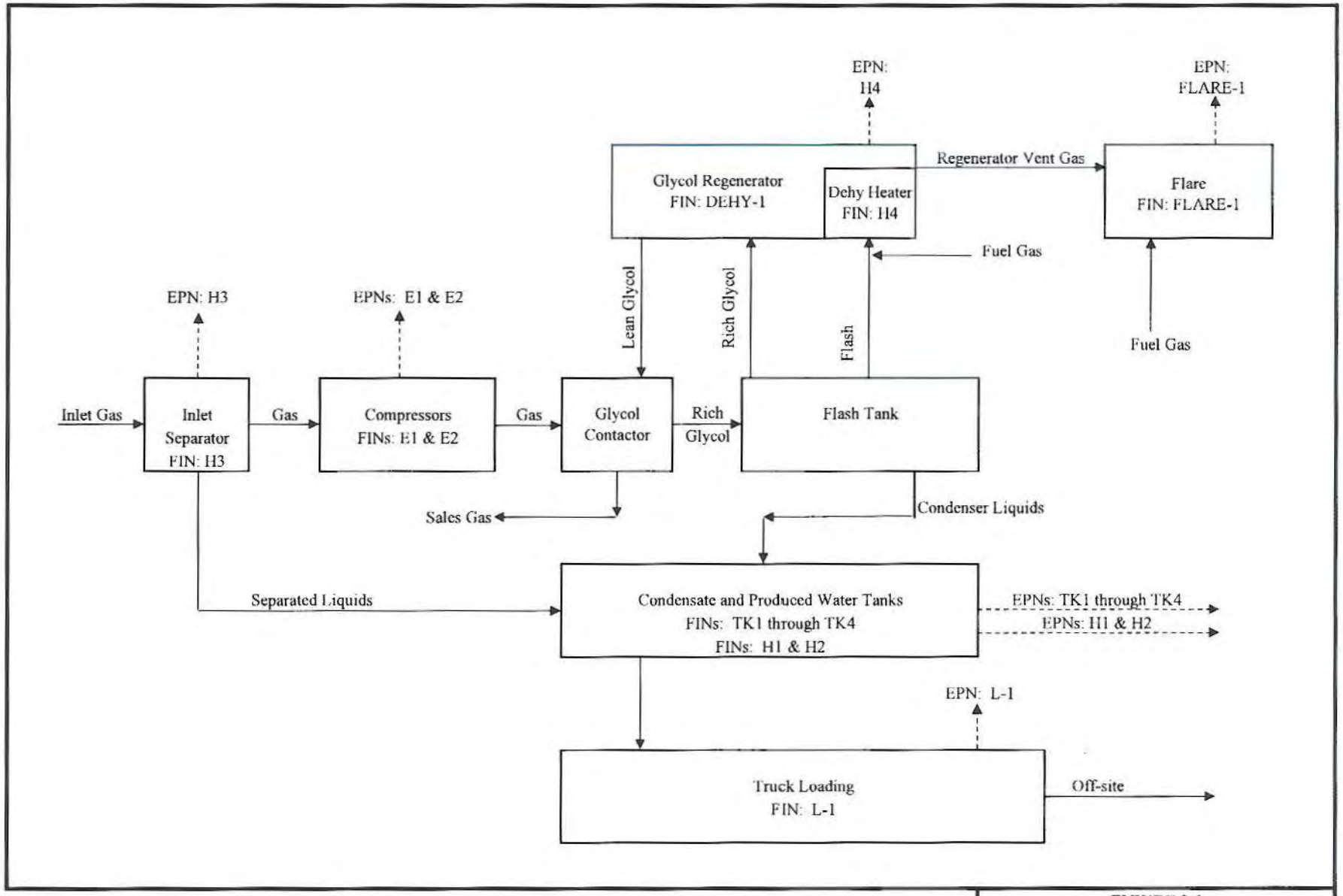

FIGURE 2-1
Process Flow Diagram
Jicarilla Compressor Station

ATTACHMENT 3

EMISSION RATE CALCULATIONS

SYNTHETIC MINOR LIMIT APPLICATION

JICARILLA COMPRESSOR STATION

XTO ENERGY, INC.

Table 3-1
XTO Energy, Inc.
Jicarilla Compressor Station
Application for Synthetic Minor Limit
Summary of Site-Wide Potential to Emit

FIN	DEHY-1	E1	E2	H1 - H4	TK1 & TK2	TK3 & TK4	TK5 & TK6	FUG	L1	COMP1-BD	COMP2-BD	PTE Emissions Total by Pollutant
EPN	DEHY-TO	E1	E2	H1 - H4	TK1 & TK2	TK3 & TK3	TK5 & TK6	FUG	L1	COMP1-BD	COMP2-BD	
Description	TEG Dehydrator	Caterpillar 3512	Caterpillar 3512	Auxiliary Heaters	Condensate Tanks	Produced Water Tanks	Produced Water Tanks	Site Fugitives	Tank Loading	Engine Blowdown	Engine Blowdown	
Rated Capacity (horsepower)/(bbl)	-	1,004	1,004	-	(2) - 400 BBL	(2) - 100 BBL	(2) - 30 BBL	-	-	-	-	
Rated Capacity (MMBtu/hr)	-	7.12	7.12	2.50	See Tanks Report	See Tanks Report	See Tanks Report	-	-	-	-	
Normal Operation												
Hourly Emission Rate (lb/hr)												
NO_x	0.15	4.09	4.09	0.25	----	----	----	----	----	----	----	**8.568**
CO	0.12	5.36	5.36	0.21	----	----	----	----	----	----	----	**11.040**
VOC	0.50	1.45	1.45	0.01	15.49	0.024	0.006	3.35	59.29	----	----	**81.585**
SO_2	0.001	0.004	0.004	0.001	----	----	----	----	----	----	----	**0.010**
PM/PM_{10}	0.01	0.07	0.07	0.02	----	----	----	----	----	----	----	**0.172**
Formaldehyde	----	0.49	0.49	0.0002	----	----	----	----	----	----	----	**0.981**
Hexane	0.01	----	----	0.004	----	----	----	----	----	----	----	**0.010**
Benzene	0.03	0.002	0.002	0.00001	0.03	----	----	0.03	0.12	----	----	**0.225**
Toluene	0.09	----	----	----	----	----	----	----	----	----	----	**0.092**
Ethylbenzene	0.01	----	----	----	----	----	----	----	----	----	----	**0.008**
Xylene	0.08	----	----	----	----	----	----	----	----	----	----	**0.077**
Annual PTE (TPY)												
NO_x	0.64	17.91	17.91	1.07	----	----	----	----	----	----	----	**37.527**
CO	0.54	23.46	23.46	0.90	----	----	----	----	----	----	----	**48.355**
VOC	2.19	6.36	6.36	0.06	9.35	0.005	0.0009	14.67	0.40	----	----	**39.402**
SO_2	0.003	0.02	0.02	0.01	----	----	----	----	----	----	----	**0.046**
PM/PM_{10}	0.04	0.31	0.31	0.08	----	----	----	----	----	----	----	**0.744**
Formaldehyde	----	2.15	2.15	0.001	----	----	----	----	----	----	----	**4.298**
Hexane	0.03	----	----	0.02	----	----	----	----	----	----	----	**0.045**
Benzene	0.13	0.01	0.01	0.00002	0.03	----	----	0.15	0.001	----	----	**0.323**
Toluene	0.40	----	----	----	----	----	----	----	----	----	----	**0.401**
Ethylbenzene	0.03	----	----	----	----	----	----	----	----	----	----	**0.033**
Xylene	0.34	----	----	----	----	----	----	----	----	----	----	**0.336**
CO_2e	764.73	3647.33	3647.33	1281.18	8.42	----	----	384.08	8.68	----	----	**9741.745**
Maintenance Operations												
Hourly Emission Rate (lb/hr)												
VOC	----	----	----	----	----	----	----	----	----	5.85	5.85	**11.694**
Benzene	----	----	----	----	----	----	----	----	----	0.02	0.02	**0.038**
Annual PTE (TPY)												
VOC	----	----	----	----	----	----	----	----	----	0.04	0.04	**0.070**
Benzene	----	----	----	----	----	----	----	----	----	0.0001	0.0001	**0.0002**
CO_2e	----	----	----	----	----	----	----	----	----	215.27	215.27	**430.532**

Notes:
1) Emissions from the condensate tanks includes flashing from both tanks.
2) Engines Blowdowns are included in SSM under Maintenance Operations.

XTO Energy, Inc.
Jicarilla Compressor Station
Application for Synthetic Minor Limit
Calculation of Greenhouse Gas Potential to Emit for Combustion Sources

Combustion-Related Green House Gas Emissions

Combustion Source EPN	HP	Btu/hp-hr	MMBtu/hr	Annual Operating Hours	Fuel Usage MMBtu/Term	CO_2e[a] metric T/yr	CO_2e[a] short T/yr	GHG Mass[a] short T/yr
H1-H4	---	---	2.50	8,760	21,900.00	1,162.28	1,281.18	1,279.95
DEHY-TO	---	---	1.49	8,760	13,072.05	693.76	764.73	764.00
E1	927	7,676	7.12	8,760	62,346.16	3,308.84	3,647.33	3,643.83
E2	927	7,676	7.12	8,760	62,346.16	3,308.84	3,647.33	3,643.83
SITE TOTAL			**18.23**	—	**159,664.36**	**8,473.71**	**9,340.57**	**9,331.61**

[a]Sample calculations:

Greenhouse Gas (GHG) Emission Factors from Tables C-1 and C-2 of 40 CFR 98, Subpart C, are as follows:

Carbon Dioxide Emission Factor (CO_2EF) = 53.02 kg/MMBtu
Methane Emission Factor (CH_4EF) = 0.001 kg/MMBtu
Nitrous Oxide Emission Factor 0.0001 kg/MMBtu

An example calculation for carbon dioxide equivalent CO_2e in metric T/yr for EPN E1 follows:
CO_2e (metric T/yr) = (0.001 metric T/kg)*(Fuel usage, MMBtu/yr))*[(CO_2EF + 21*CH_4EF + 310*N_2OEF), kg/MMBtu]
CO2e (metric T/yr) = (0.001 metric T/kg) * (62,346 MMBtu/yr) * [(53.02 kg/MMBtu) + (21*0.001 kg/MMBtu) + (310*0.0001 kg/MMBtu)] = 3308.84 metric T/yr

An example calculation for CO_2e in short T/yr for EPN E1 follows:
CO_2e (short T/yr) = (0.001 metric T/kg) * (Fuel usage, MMBtu/yr)) * [(CO_2EF + 21*CH_4EF + 310*N_2OEF), kg/MMBtu] * (2,204.6 lb/metric T) / (2,000 lb/short T)
CO2e (short T/yr) = (0.001 metric T/kg) * (62,346 MMBtu/yr) * [(53.02 kg/MMBtu) + (21*0.001 kg/MMBtu) + (310*0.0001 kg/MMBtu)] * (2,204.6 lb/metric T) / (2,000 lb/short T) = 3647.33 short T/yr

An example calculation for GHG Mass in short T/yr for EPN E1 follows:
GHG Mass (short T/yr) = (0.001 metric T/kg) * (Fuel usage, MMBtu/yr) * (CO_2EF+CH_4EF+N_2OEF) * (2,204.6 lb/metric T) / (2,000 lb/short T)
GHG Mass (short T/yr) = (0.001 metric T/kg) * (62,346 MMBtu/yr) * [(53.02 kg/MMBtu) + (0.001 kg/MMBtu) + (0.0001 kg/MMBtu)] * (2,204.6 lb/metric T) / (2,000 lb/short T) = 3643.83 short T/yr

XTO Energy, Inc.
Jicarilla Compressor Station
Application for Synthetic Minor Limit
Calculation of Startup, Shutdown and Maintenance (SSM) Potential to Emit

Representative gas sample obtained 7/6/2011

Density of Air at 60 F & 14.7 psia =	0.0764	lb/scf
Specific Gravity of Gas	0.7191	
Density of Gas	0.0549	lb/scf

Annual vent rate per Operations

Unit No	Annual Venting (scf)	Annual Gas Vented (lbs/yr)	Annual Gas Vented (tons/yr)
E1	6000	329.518	0.16
E2	6000	329.518	0.16

Speciation by Pollutant

Emission Source	Speciated Pollutant	COMP1 Wt %	SSM Emissions COMP1-BD (tpy)	SSM Emissions COMP2-BD (tpy)
Startup, Shutdown, Maintenance	Nitrogen	0.6453	0.001	0.001
	Carbon Dioxide	1.4729	0.002	0.002
	Methane	62.1467	0.102	0.102
	Ethane	14.4430	0.024	0.024
	Propane	9.8410	0.016	0.016
	I-Butane	2.2597	0.004	0.004
	N-Butane	3.3839	0.006	0.006
	I-Pentane	1.4053	0.002	0.002
	N-Pentane	1.0582	0.002	0.002
	Hexanes Plus	3.3441	0.006	0.006
	Total	100.0	-	-
Annual VOC Emissions			**0.035**	**0.035**
Hourly VOC Emissions			**5.847**	**5.847**
Annual Benzene Emissions			**0.0001**	**0.0001**
Hourly Benzene Emissions			**0.019**	**0.019**
Annual Carbon Dioxide Emissions			**0.243**	**0.243**
Hourly Carbon Dioxide Emissions			**40.445**	**40.445**
Annual Methane Emissions			**10.239**	**10.239**
Hourly Methane Emissions			**1706.536**	**1706.536**

1.Blowdown frequency is 12 blowdowns per year and 1 hour per blowdown.

XTO Energy, Inc.
Jicarilla Compressor Station
Application for Synthetic Minor Limit
Calculation of Internal Combustion Engine Potential to Emit

Unit ID	**E1**	**Units, Data Source**
Description	Caterpillar 3512	
Rated Output	1,004	hp, manufacturer
Site Elevation, ft	6,550	ft, maximum altitude allowed for deration of portable engines
Altitude Deration Factor	8%	3% per 1000' over 4000', NMED guideline
Altitude Derated Output	927	hp
Engine Type	4-Stroke, Lean-Burn	manufacturer
Fuel Type	NG	manufacturer
Operating hr/yr	8,760	Maximum actual hours
Stack Information		
Stack Height	21	ft
Exhaust Gas Velocity	96	ft/sec
Exhaust Temp	837	°F, per manufacturer specification sheet
Stack Inside Diameter	Varies	ft
Exhaust Gas Flow	6154	cfm, per manufacturer specification sheet
Emission Factor (EF)		
NO_x	2.00	g/hp-hr, per manufacturer's specifications
CO	2.62	g/hp-hr, per manufacturer's specifications
VOC	0.71	g/hp-hr, per manufacturer's specifications
SO_2	5.88E-04	lb/MMBtu, AP-42 Tbl 3.2-2 (07/00)
PM/PM_{10}	0.0099871	lb/MMBtu (PM Condensable assumed), AP-42 Tbl 3.2-2 (07/00)
Formaldehyde	0.24	g/hp-hr, per manufacturer's specifications
Benzene	0.001	g/hp-hr, the Benzene emission factor is ratioed from the AP-42 VOC factor
Hourly Emission Rate		
NO_x	4.09	lb/hr, calc'd from EF data
CO	5.36	lb/hr, calc'd from EF data
VOC	1.45	lb/hr, calc'd from EF data
SO_2	0.004	lb/hr, calc'd from EF data
PM/PM_{10}	0.07	lb/hr, calc'd from EF data
Formaldehyde	0.49	lb/hr, calc'd from EF data
Benzene	0.002	lb/hr, calc'd from EF data
Annual PTE		
NO_x	17.91	tpy, calc'd from lb/hr data
CO	23.46	tpy, calc'd from lb/hr data
VOC	6.36	tpy, calc'd from lb/hr data
SO_2	0.02	tpy, calc'd from lb/hr data
PM/PM_{10}	0.31	tpy, calc'd from lb/hr data
Formaldehyde	2.15	tpy, calc'd from lb/hr data
Benzene	0.01	tpy, calc'd from lb/hr data
Fuel Flowrates		
Fuel Use Rated Capacity	7.12	MMBtu/hr
Fuel LHV	950	Btu/scf, estimated
Fuel Use Rate	7,676	Btu/hp-hr, manufacturer
Fuel Use Rate	7,491.7	scf/hr
Fuel Use Rate	65.6	MMscf/yr

XTO Energy, Inc.
Jicarilla Compressor Station
Application for Synthetic Minor Limit
Calculation of Internal Combustion Engine Potential to Emit

Unit ID	E2	Units, Data Source
Description	Caterpillar 3512	
Rated Output	1,004	hp, manufacturer
Site Elevation, ft	6,550	ft, maximum altitude allowed for deration of portable engines
Altitude Deration Factor	8%	3% per 1000' over 4000', NMED guideline
Altitude Derated Output	927	hp
Engine Type	4-Stroke, Lean-Burn	manufacturer
Fuel Type	NG	manufacturer
Operating hr/yr	8,760	Maximum actual hours
Stack Information		
Stack Height	21	ft
Exhaust Gas Velocity	96	ft/sec
Exhaust Temp	837	°F, per manufacturer specification sheet
Stack Inside Diameter	Varies	ft
Exhaust Gas Flow	6154	cfm, per manufacturer specification sheet
Emission Factor (EF)		
NO_x	2.00	g/hp-hr, per manufacturer's specifications
CO	2.62	g/hp-hr, per manufacturer's specifications
VOC	0.71	g/hp-hr, per manufacturer's specifications
SO_2	5.88E-04	lb/MMBtu, AP-42 Tbl 3.2-2 (07/00)
PM/PM_{10}	0.0099871	lb/MMBtu (PM Condensable assumed), AP-42 Tbl 3.2-2 (07/00)
Formaldehyde	0.24	g/hp-hr, per manufacturer's specifications
Benzene	0.001	g/hp-hr, the Benzene emission factor is ratioed from the AP-42 VOC factor
Hourly Emission Rate		
NO_x	4.09	lb/hr, calc'd from EF data
CO	5.36	lb/hr, calc'd from EF data
VOC	1.45	lb/hr, calc'd from EF data
SO_2	0.004	lb/hr, calc'd from EF data
PM/PM_{10}	0.07	lb/hr, calc'd from EF data
Formaldehyde	0.49	lb/hr, calc'd from EF data
Benzene	0.002	lb/hr, calc'd from EF data
Annual PTE		
NO_x	17.91	tpy, calc'd from lb/hr data
CO	23.46	tpy, calc'd from lb/hr data
VOC	6.36	tpy, calc'd from lb/hr data
SO_2	0.02	tpy, calc'd from lb/hr data
PM/PM_{10}	0.31	tpy, calc'd from lb/hr data
Formaldehyde	2.15	tpy, calc'd from lb/hr data
Benzene	0.01	tpy, calc'd from lb/hr data
Fuel Flowrates		
Fuel Use Rated Capacity	7.12	MMBtu/hr
Fuel LHV	950	Btu/scf, estimated
Fuel Use Rate	7,676	Btu/hp-hr, manufacturer
Fuel Use Rate	7,491.7	scf/hr
Fuel Use Rate	65.6	MMscf/yr

XTO Energy, Inc.
Jicarilla Compressor Station
Application for Synthetic Minor Limit
Calculation of Fugitives Potential to Emit

		Component Count	Hours	Factors*	%NMNEVOC	VOC Emissions		% Methane	Methane Emissions	%Carbon Dioxide	Carbon Dioxide Emissions
				lb/hr/component		lb/yr	TPY		TPY		TPY
Valves											
	Gas/Vapor	400	8760	0.0099200	25.00%	8689.9200	4.3450	65.00%	11.2969	5.00%	0.8690
	Light Oil	100	8760	0.0055000	100.00%	4818.0000	2.4090	0.00%	0.0000	0.00%	0.0000
	Heavy Oil	50	8760	0.0000190	100.00%	8.3220	0.0042	0.00%	0.0000	0.00%	0.0000
	Water/Light Oil	100	8760	0.0002160	100.00%	189.2160	0.0946	0.00%	0.0000	0.00%	0.0000
Pumps											
	Gas/Vapor	18	8760	0.0052900	25.00%	208.5318	0.1043	65.00%	0.2711	5.00%	0.0209
	Light Oil	9	8760	0.0286600	100.00%	2259.5544	1.1298	0.00%	0.0000	0.00%	0.0000
	Heavy Oil	9	8760	0.0011300	100.00%	89.0892	0.0445	0.00%	0.0000	0.00%	0.0000
	Water/Light Oil	9	8760	0.0000530	100.00%	4.1785	0.0021	0.00%	0.0000	0.00%	0.0000
Flanges											
	Gas/Vapor	750	8760	0.0008600	25.00%	1412.5500	0.7063	65.00%	1.8363	5.00%	0.1413
	Light Oil	100	8760	0.0002430	100.00%	212.8680	0.1064	0.00%	0.0000	0.00%	0.0000
	Heavy Oil	50	8760	0.0000009	100.00%	0.3767	0.0002	0.00%	0.0000	0.00%	0.0000
	Water/Light Oil	100	8760	0.0000062	100.00%	5.4312	0.0027	0.00%	0.0000	0.00%	0.0000
Open-ended Lines											
	Gas/Vapor	45	8760	0.0044100	25.00%	434.6055	0.2173	65.00%	0.5650	5.00%	0.0435
	Light Oil	10	8760	0.0030900	100.00%	270.6840	0.1353	0.00%	0.0000	0.00%	0.0000
	Heavy Oil	10	8760	0.0003090	100.00%	27.0684	0.0135	0.00%	0.0000	0.00%	0.0000
	Water/Light Oil	10	8760	0.0005500	100.00%	48.1800	0.0241	0.00%	0.0000	0.00%	0.0000
Connectors											
	Gas/Vapor	750	8760	0.0004400	25.00%	722.7000	0.3614	65.00%	0.9395	5.00%	0.0723
	Light Oil	50	8760	0.0004630	100.00%	202.7940	0.1014	0.00%	0.0000	0.00%	0.0000
	Heavy Oil	50	8760	0.0000170	100.00%	7.4460	0.0037	0.00%	0.0000	0.00%	0.0000
	Water/Light Oil	150	8760	0.0002430	100.00%	319.3020	0.1597	0.00%	0.0000	0.00%	0.0000
Other: Compressors, relief valves, process drains, diaphragms, dump arms, hatches, instruments, meters, polished rods, and vents											
	Gas/Vapor	60	8760	0.0194	25.00%	2549.1600	1.2746	65.00%	3.3139	5.00%	0.2549
	Light Oil	10	8760	0.0165	100.00%	1445.4000	0.7227	0.00%	0.0000	0.00%	0.0000
	Heavy Oil	10	8760	0.0001	100.00%	5.9568	0.0030	0.00%	0.0000	0.00%	0.0000
	Water/Light Oil	20	8760	0.0309	100.00%	5413.6800	2.7068	0.00%	0.0000	0.00%	0.0000
					TOTAL (TPY)		**14.67**		**18.22**		**1.40**
					TOTAL (lb/hr)		3.35		4.16		0.32

**NOTE - emission factors based on Table 2-4 of U.S. EPA's 1995 Protocol for Equipment Leak Emission Estimates.*

Fugitive HAP Emissions Totals

	Gas wt%	Liquid wt %	Total Gas VOC	Total Liquid VOC	Total Fugitive VOC	Total HAP	Total HAP
	wt%	wt%	wt%	wt%	TPY	lb/hr	TPY
Benzene	0.0689%	0.7369%	25.00%	100.00%	14.67	0.034	**0.149**
Toluene	0.1340%	4.5126%	25.00%	100.00%	14.67	0.169	**0.741**
E-benzene	0.0071%	0.4142%	25.00%	100.00%	14.67	0.015	**0.065**
Xylene	0.0591%	3.0509%	25.00%	100.00%	14.67	0.110	**0.482**
n-Hexane	0.4174%	4.3077%	25.00%	100.00%	14.67	0.200	**0.877**
			TOTAL Fugitive HAP's			0.528	**2.314**

XTO Energy, Inc.
Jicarilla Compressor Station
Application for Synthetic Minor Limit
Calculation of Heaters Potential to Emit

Unit FIN	H1	H2	H3	H4	Units, Data Source
Description	Tank Heater	Tank Heater	Separator Heater	Dehy Heater	
Fuel Type	NG	NG	NG	NG	manufacturer
Operating hr/yr	8,760	8,760	8,760	8,760	Maximum actual hours
Stack Information					
Stack Height	15	15	15	15	ft
Exhaust Gas Velocity	3.0	3.0	3.0	3.0	ft/sec, estimated
Exhaust Temp	400	400	400	400	°F, estimated
Stack Inside Diameter	1.5	1.5	1.5	1.5	ft, site inspection
Exhaust Gas Flow	397	397	397	265	cfm
Fuel Flowrates					
Rated Input Capacity	0.50	0.50	0.50	1.00	MMBtu/hr, per manufacturer
Fuel HHV	1,020	1,020	1,020	1,020	Btu/scf, estimated
Fuel Use Rate	490.2	490.2	490.2	980.4	scfh @ 1020 Btu/scf (HHV)
Fuel Use Rate	4.3	4.3	4.3	8.6	MMscf/yr @ 1020 Btu/scf (HHV)
Emission Factor (EF)					
NO_x	100	100	100	100	lb/MMscf, AP-42 Tbl 1.4-1 (07/98)
CO	84	84	84	84	lb/MMscf, AP-42 Tbl 1.4-1 (07/98)
VOC	5.5	5.5	5.5	5.5	lb/MMscf, AP-42 Tbl 1.4-2 (07/98)
SO_2	0.6	0.6	0.6	0.6	lb/MMscf, AP-42 Tbl 1.4-2 (07/98)
PM/PM_{10}	7.6	7.6	7.6	7.6	lb/MMscf, AP-42 Tbl 1.4-2 (07/98)
Formaldehyde	0.075	0.075	0.075	0.075	lb/MMscf, AP-42 Tbl 1.4-3 (07/98)
Hexane	1.8	1.8	1.8	1.8	lb/MMscf, AP-42 Tbl 1.4-3 (07/98)
Benzene	0.0021	0.0021	0.0021	0.0021	lb/MMscf, AP-42 Tbl 1.4-3 (07/98)
Hourly Emission Rate in pounds per hour					
NO_x	0.05	0.05	0.05	0.10	lb/hr, calc'd from EF data
CO	0.04	0.04	0.04	0.08	lb/hr, calc'd from EF data
VOC	0.003	0.003	0.003	0.01	lb/hr, calc'd from EF data
SO_2	0.0003	0.0003	0.0003	0.001	lb/hr, calc'd from EF data
PM/PM_{10}	0.004	0.004	0.004	0.01	lb/hr, calc'd from EF data
Formaldehyde	0.00004	0.00004	0.00004	0.0001	lb/hr, calc'd from EF data
Hexane	0.001	0.001	0.001	0.002	lb/hr, calc'd from EF data
Benzene	0.000001	0.000001	0.000001	0.000002	lb/hr, calc'd from EF data
Annual Potential To Emit (PTE) in tons per year					
NO_x	0.21	0.21	0.21	0.43	tpy, calc'd from lb/hr data
CO	0.18	0.18	0.18	0.36	tpy, calc'd from lb/hr data
VOC	0.01	0.01	0.01	0.02	tpy, calc'd from lb/hr data
SO_2	0.001	0.001	0.001	0.003	tpy, calc'd from lb/hr data
PM/PM_{10}	0.016	0.02	0.016	0.03	tpy, calc'd from lb/hr data
Formaldehyde	0.0002	0.0002	0.0002	0.0003	tpy, calc'd from lb/hr data
Hexane	0.004	0.004	0.004	0.01	tpy, calc'd from lb/hr data
Benzene	0.000005	0.000005	0.000005	0.00001	tpy, calc'd from lb/hr data

XTO Energy, Inc.
Jicarilla Compressor Station
Application for Synthetic Minor Limit
Calculation of Flare Dehy Vent and Fuel Gas Potential to Emit

EPN	FIN	Description	Heat Flow (MMBtu/hr)	Annual Operating Hours (hr/yr)	Pollutant	Emission Factor [a]	Unit	Potential to Emit (PTE) Hourly[b] (lb/hr)	Potential to Emit (PTE) Annual[c] (T/yr)
FLARE-1	FLARE-1	Flare 1 Fuel Gas	0.4	8,760	CO	0.3465	lb/MMBtu	0.12	0.53
					NO_X	0.0680	lb/MMBtu	0.02	0.10
					SO_2	0.0006	lb/MMBtu	0.0002	0.001
FLARE-1	DEHY-1	Flare 1Dehy Vent	0.5	8,760	CO	0.3465	lb/MMBtu	0.17	0.75
					NO_X	0.0680	lb/MMBtu	0.03	0.15

[a] Emission Factors for CO and NO_x are based upon the Draft TNRCC Guidance Document for Flares and Vapor Oxidizers (dated 10/00) for steam-assisted low-Btu flares.

[b] An example calculation for hourly PTE CO for EPN FLARE-1 follows:

CO (lb/hr) = (Heat Flow, MMBtu/hr)*(Emission Factor, lb/MMBtu)

CO (lb/hr) = (0.4 MMBtu/hr)*(0.3465 lb/MMBtu)

= 0.12 lb/hr CO

[c] An example calculation for annual PTE CO for EPN FLARE-1 follows:

CO (T/yr) = (Hourly PTE, lb/hr)*(Annual Operating Hours, hr/yr)/(2,000 lb/T)

CO (T/yr) = (0.12 lb/hr)*(8,760 hr/yr)/(2,000 lb/T)

= 0.53 T/yr CO

XTO Energy, Inc.
Jicarilla Compressor Station
Application for Synthetic Minor Limit
Glycol Unit Potential to Emit

		Regenerator Emissions				
		FIN: DEHY-1		EPN: FLARE-1		Uncontrolled
	Component	Uncontrolled Emissions		Controlled Emissions[a]		Stream
Component	HHV (Btu/lb)	Hourly (lb/hr)	Annual (T/yr)	Hourly (lb/hr)	Annual (T/yr)	HHV (Btu)
Carbon Dioxide	0	0.0340	0.1489	0.0340	0.1489	0
Methane	23861	5.7935	25.3753	0.1159	0.5075	138,239
Ethane	22304	1.7462	7.6483	0.0349	0.1530	38,947
Propane	21646	1.6467	7.2124	0.0329	0.1442	35,644
Isobutane	21242	0.5044	2.2091	0.0101	0.0442	10,714
n-Butane	21293	0.9347	4.0939	0.0187	0.0819	19,903
Isopentane	21025	0.4527	1.9827	0.0091	0.0397	9,518
n-Pentane	21072	0.4162	1.8231	0.0083	0.0365	8,770
Cyclopentane	20350	0.0935	0.4095	0.0019	0.0082	1,903
n-Hexane	20928	0.2962	1.2971	0.0059	0.0259	6,199
Cyclohexane	20195	0.5495	2.4066	0.0110	0.0481	11,097
other Hexanes	20928	0.5046	2.2102	0.0101	0.0442	10,560
Heptanes	20825	0.9948	4.3571	0.0199	0.0871	20,717
Methylcycloshexane	20146	1.1584	5.0737	0.0232	0.1015	23,337
Benzene	18172	1.4837	6.4985	0.0297	0.1300	26,962
Toluene	18422	4.5768	20.0466	0.0915	0.4009	84,314
Ethylbenzene	18658	0.3764	1.6486	0.0075	0.0330	7,023
Xylenes	18614	3.8381	16.8109	0.0768	0.3362	71,442
C8+ Heavies	20747	6.9475	30.4303	0.1390	0.6086	144,140
Total VOC		24.7742	108.5103	0.4956	2.1702	492,243

[a] The regenerator vent is controlled with a flare.

XTO Energy, Inc.
Jicarilla Compressor Station
Application for Synthetic Minor Limit
Flash Potential to Emit

Gas-Liquid Ratio: 29.52 ft^3 of Stock Tank Vapor/bbl Stock Tank Liquid

			Allowable Emission Rates	
			8.0 BPD	
Component	Flash Gas Conc. (mol%)	MW	Hourly (lb/hr)	Annual (T/yr)
Nitrogen	1.2	28.013	0.0087	0.0380
Carbon Dioxide	0.414	44.01	0.0047	0.0206
Methane	22.037	16.043	0.0914	0.4001
Ethane	15.184	30.07	0.1180	0.5167
Propane	14.247	44.097	0.1623	0.7110
I-Butane	33.15	58.123	0.4979	2.1806
N-Butane	6.827	58.123	0.1025	0.4491
I-Pentane	2.381	72.15	0.0444	0.1944
N-Pentane	2.11	72.15	0.0393	0.1723
I-Hexane	0	86.177	0.0000	0.0000
N-Hexane (HAP)	0.907	86.177	0.0202	0.0885
Methylcyclopentane	0	84.161	0.0000	0.0000
Benzene (HAP)	0.117	78.114	0.0024	0.0103
Cyclohexane	0	84.161	0.0000	0.0000
Heptanes	0.917	100.204	0.0237	0.1040
Methylcyclohexane	0	98.188	0.0000	0.0000
Toluene (HAP)	0.157	92.141	0.0037	0.0164
i-Octane	0	114.231	0.0000	0.0000
Octanes	0.295	114.231	0.0087	0.0381
Ethylbenzene	0.004	106.167	0.0001	0.0005
Xylenes (HAP)	0.021	106.167	0.0006	0.0025
Nonanes	0.024	128.258	0.0008	0.0035
Decane +	0.005	189.195	0.0002	0.0011
Total	100.00	43.718	1.1296	4.9478
Total VOC			**0.9069**	**3.9723**
Total HAP			0.0269	0.1177
Total BTEX			0.0067	0.0292

NOTE: Emission calculations based on laboratory measurement of the Gas-Oil-Ratio (GOR) from a pressurized liquid sample. Standard conditions 14.65 psia and 60 °F

Sample Calculations:

Hourly Propane Emissions from EPN TK1&TK2

$$\frac{(29.5\ ft^3/bbl) * (8.00\ bbl/day) * (14.65\ psia) * (0.14247) * (44.097\ lb/lbmol)}{(24\ hr/day) * (10.73\ psia\text{-}ft^3/lbmol\text{-}°R) * (520\ °R)} = 0.1623\ lb/hr$$

Annual Propane Emissions from EPN TK1&TK2

(0.1623 lb/hr) * (8,760 hr/yr) / (2,000 lb/T) = 0.7110 T/yr

XTO Energy, Inc.
Jicarilla Compressor Station
Application for Synthetic Minor Limit
Calculation of Produced Water and Condensate Tanks Potential to Emits VOC

Variable	Description	Value	Units
L_T	total loss = L_H * 100hrs/yr * 1 Ton/2000 #	See Table	Ton/yr
L_S	standing loss = 365 Vv Wv Ke Ks	See Table	lb/yr
L_H	total loss = standing loss / 8760 hr/yr	See Table	lb/hr
	Roof Construction	Cone	
RVP	Condensate Reid Vapor Pressure	11.6	psia
ΔPb	Breather vent pressure range	0.3125	psia
I	Solar insolation factor	1810	Btu/ft2-day
P_A	Atmospheric Pressure	14.7	psia
$\bar{T}$	Annual Average Temperature	56.5	°F
T_{AX}	Daily Maximum Ambient Temperature	530	°R
T_{AN}	Daily Minimum Ambient Temperature	502	°R
ΔT_A	Daily average ambient temperature range	28	°R
Kp	Product factor	1	

			Tank Specifications							Material Specifications																
			V/H	D	H/L	Capacity	Color		α	Mv	P_{MAX}	Q'		ΔTv	Hvo	Vv	T_{LA}	P_{VA}	Wv	ΔPv	Ke	Ks	Kn	L_S	L_W
Tank	Material [1]	No. of Tanks	Tank Type	Tank Diameter (ft)	Tank Height/ Length (ft)	Tank Capacity (bbl)	Paint Color	Paint Conditions	Paint Solar Absorbance Factor	Vapor Molecular Weight	Reid Vapor Pressure (psia)	Max. Hourly Thruput per tank (bbl/hr)	Annual thruput (bbl)/tank	Daily Vapor Temp. Range °F	Vapor Space Outage (ft)	Vapor Space Volume (ft3)	Daily Average Liquid Surface Temp °R	Average Vapor Pressure (psia)	Vapor Density (lb/ft3)	Daily Vapor Pressure Range	Vapor Space Expan. Factor	Vented Vapor Set. Factor	Turnover Factor	Standing Loss per tank (lb/yr)	Working Loss per tank (lb/yr)
TK3 & TK4	Produced Water	2	V	9.5	8	100	Gray	Poor	0.63	44	0.232	100	1,460	52.09	4.10	290.5	526.6	0.053	0.00041	0.04537	0.0938	0.99	1.00	4.06	3.41
TK5 & TK6	Produced Water	2	V	5.5	6	30	Gray	Poor	0.63	44	0.116	30	365	52.09	3.06	72.6	526.6	0.053	0.00041	0.04537	0.0938	0.99	1.00	1.02	0.65
TK1 & TK2	Condensate	2	V	12	20	400	Gray	Poor	0.63	44	11.600	400	1,460	52.09	10.13	1145.1	526.6	10.158	0.07859	4.08445	0.9295	0.16	1.00	4732.47	648.35

1. Assume 2 mol% condensate for Produced Water Tank TK3 & TK 4 containing separator bottoms and scrubber dumps off of the engines. Assume 1 mol% condensate for Produced Water Tanks TK5 & TK6 containing water from the dehydration unit.

Condensate Vapor Pressure at T_{LA}:

P = exp{ [(2799/(T+459.6) - 2.227]log10(RVP) - 7261/(T+459.6) + 12.82} (Figure 7.1-13b) = exp{ [(2799/(526.6) - 2.227]log10(11.600) - 7261/(526.6) + 12.82} = 10.158 psia

B = 7261 - 1216 ln(RVP) (figure 7.1-16, for calculating ΔPv) = 7261 - 1216 ln(11.600) = 4280.58

Produced Water Vapor Pressure at T_{LA}:

P = exp{ [(2799/(T+459.6) - 2.227]log10(RVP) - 7261/(T+459.6) + 12.82} (Figure 7.1-13b) = exp{ [(2799/(526.6) - 2.227]log10(0.232) - 7261/(526.6) + 12.82} = 0.053 psia

B = 7261 - 1216 ln(RVP) (figure 7.1-16, for calculating ΔPv) = 7261 - 1216 ln(0.232) = 9037.60

XTO Energy, Inc.
Jicarilla Compressor Station
Application for Synthetic Minor Limit
Calculation of Tanks Potential to Emit

							Flash Emissions				PTE VOC Emissions		PTE Benzene Emissions		Carbon Dioxide Emissions		Methane Emissions	
FIN	Tank Name	Working Loss (lb/yr)	Breathing Loss (lb/yr)	Number of Tanks	Annual Turnovers (turnovers/yr)	Minimum Turnover Time (hr/turnover)	VOC (lb/hr)	Benzene (lb/hr)	VOC (T/yr)	Benzene (T/yr)	Hourly (lb/hr)	Annual (T/yr)	Hourly (lb/hr)	Annual (T/yr)	Hourly (lb/hr)	Annual (T/yr)	Hourly (lb/hr)	Annual (T/yr)
TK1	Condensate Tank 1	648.35	4732.47	1	4	24	0.4535	0.0012	1.9861	0.0052	7.75	4.68	0.02	0.01	0.002	0.01	0.05	0.20
TK2	Condensate Tank 2	648.35	4732.47	1	4	24	0.4535	0.0012	1.9861	0.0052	7.75	4.68	0.02	0.01	0.002	0.01	0.05	0.20
TK3	Produced Water Tank 3	3.41	4.06	1	12	24	--	--	--	--	0.01	0.004	--	--	--	--	--	--
TK4	Produced Water Tank 4	3.41	--	1	12	24	--	--	--	--	0.01	0.002	--	--	--	--	--	--
TK5	Produced Water Tank 5	0.85	--	1	12	24	--	--	--	--	0.003	0.0004	--	--	--	--	--	--
TK6	Produced Water Tank 6	0.85	--	1	12	24	--	--	--	--	0.003	0.0004	--	--	--	--	--	--

*

Flash emissions for the Condensate Tanks TK1 and TK 2 are represented in the following pages. The tank emissions working and breathing losses are calculated using AP-42 Chapter 7 Guidelines. The working and breathing losses are used to calculate the hourly and annual emissions below.

An example calculation of the hourly emissions for FIN TK1 follows:

VOC (lb/hr) = ((((Breathing Loss, lb/yr)/(8,760 hr/yr))+((Working Loss, lb/yr)/(Number of turnovers/yr)/(Number of hrs/turnover)))*(Number of Tanks))+(Flash Hourly Emissions, lb/hr)

VOC (lb/hr) = ((((4732.47 lb/yr)/(8,760 hr/yr))+((648.35 lb/yr)/(04 turnovers/yr)/(24 hr/turnover)))*(1 tank)) + (0.45 lb/hr)

= 7.75 lb/hr

An example calculation of the annual emissions for FIN TK1 follows:

VOC (T/yr) = ((((Working Loss, lb/yr)+(Breathing Loss, lb/yr))/(2,000 ton/yr))*(Number of Tanks))+(Flash Annual Emissions, T/yr)

VOC (T/yr) = ((((648.35 lb/yr)+(4732.47 lb/yr))/(2,000 lb/ton))*(1 tank))+(1.99 T/yr)

= 4.68 T/yr

See the following pages for a printout of the EPA Tanks 4.0.9d emissions reports.

TK4, TK5 and TK6 are underground storage tanks; therefore, will not have breathing loss emissions.

XTO Energy, Inc.
Jicarilla Compressor Station
Application for Synthetic Minor Limit
Calculation of Loading Potential to Emit

Sample Calculations for Loading:

L_L = Loading Loss (lb/Mgal) = 12.46 * (S, Saturation Factor) * (P, vapor pressure in psia) * (M, molecular weight) / (T, temperature in °R)
Loading Loss = 12.46 * (0.6) * (10.2 psia) * (44 lb/lbmol) / (504 °R) = 6.59 lb/Mgal

Hourly Emissions = (Hourly Throughput, Mgal/hr) * (Max. Loading Loss, lb/Mgal) * (condensate fraction) * (loading rack capture) * (100%-loading rack control)
Hourly Emissions = (9.0 Mgalhr) * (6.6 lb/Mgal) * (10000%) * (0.0%) *(100% - 0.0%) = 59.28 lb/hr

Annual Emissions = (Max. Throughput, Mgal/yr) * (Max. Loading Loss, lb/Mgal) * (condensate fraction) * (loading rack capture) * (100%-loading rack control) / (2,000 lb/T)
Annual Emissions = (123 Mgal/yr) * (6.6 lb/Mgal) * (10000%) * (0.0%) * (100% - 0.0%) / (2,000 lb/T) = 0.40 T/yr

Facility ID Number (FIN)	Facility Name	Emission Point Number (EPN)	Emission Point Name	Condensate Fraction	S	M	P psia	L_L lb/Mgal	Hourly Throughput (Mgal/hr)	Annual Throughput (Mgals/yr)	Control Device Capture Efficiency	Control Efficiency	Hourly VOC Emissions (lb/hr)	Annual VOC Emissions (T/yr)	Hourly Benzene Emissions (lb/hr)	Annual Benzene Emissions (T/yr)	Annual Methane Emissions (T/yr)	Annual Carbon Dioxide Emissions (T/yr)
L1	Condensate Loading TK1 &TK2	L1	Loading Rack	100.00	0.6	44	10.2	6.59	9.0	123	0%	0%	59.28	0.40	0.12	0.0008	0.40	0.02
L1	Produced Water Loading TK3 & TK4	L1	Loading Rack	2.00	0.6	44	0.05	0.03	9.0	123	0%	0%	0.01	0.00004	0.00001	0.0000001	0.01	0.0004
L1	Produced Water Loading TK 5 & TK6	L1	Loading Rack	1.00	0.6	44	0.05	0.03	9.0	31	0%	0%	0.003	0.00001	0.00001	0.00000001	0.004	0.0002
												L1 Total	59.29	0.40	0.12	0.001	0.41	0.02

1. Emission factors are from AP-42, Table 5.2-5, dated June 2008. Material properties are based on condensate with RVP 11.6.
2. The produced water tanks, TK 3 & TK4, contain separator bottoms and scrubber dumps off of the engines. Loading losses are estimated as 2% condensate
3. The produced water tanks, TK5 & TK6, contains water from the dehydration unit. Loading losses are estimated as 1% condensate.

GRI-GLYCalc VERSION 4.0 - SUMMARY OF INPUT VALUES

Case Name: Jicarilla Compressor Station
File Name: T:\XTO Energy - 229\229-32 Jicarilla NM Title V\Calculations\Jicarilla With Controls no condenser 12-2'
Date: December 29, 2011

DESCRIPTION:

Description: 4.5 MMSCD TEG Dehydrator System
Gas Analysis 07/06/2011 Jicarilla
7 lb water/mmscf discharge specification
1.92 gpm max flow for Kimray 10015

Annual Hours of Operation: 8760.0 hours/yr

WET GAS:

Temperature: 81.00 deg. F
Pressure: 149.00 psig
Wet Gas Water Content: Saturated

Component	Conc. (vol %)
Carbon Dioxide	0.6971
Nitrogen	0.4798
Methane	80.6887
Ethane	10.0047
Propane	4.6485
Isobutane	0.8098
n-Butane	1.2127
Isopentane	0.4057
n-Pentane	0.3055
Cyclopentane	0.0204
n-Hexane	0.1009
Cyclohexane	0.0504
Other Hexanes	0.2258
Heptanes	0.1360
Methylcyclohexane	0.0671
Benzene	0.0184
Toluene	0.0303
Ethylbenzene	0.0014
Xylenes	0.0116
C8+ Heavies	0.0852

DRY GAS:

Flow Rate: 4.5 MMSCF/day
Water Content: 7.0 lbs. H2O/MMSCF

LEAN GLYCOL:

Glycol Type: TEG
Water Content: 1.5 wt% H2O
Flow Rate: 1.9 gpm

PUMP:

Glycol Pump Type: Gas Injection
Gas Injection Pump Volume Ratio: 0.120 acfm gas/gpm glycol

REGENERATOR OVERHEADS CONTROL DEVICE:

Control Device: Combustion Device
Destruction Efficiency: 98.0 %
Excess Oxygen: 0.0 %
Ambient Air Temperature: 65.0 deg. F

GRI-GLYCalc VERSION 4.0 - AGGREGATE CALCULATIONS REPORT

Case Name: Jicarilla Compressor Station
File Name: T:\XTO Energy - 229\229-32 Jicarilla NM Title V\Calculations\Jicarilla With Controls no condenser 12-
Date: December 29, 2011

DESCRIPTION:

Description: 4.5 MMSCD TEG Dehydrator System
Gas Analysis 07/06/2011 Jicarilla
7 lb water/mmscf discharge specification
1.92 gpm max flow for Kimray 10015

Annual Hours of Operation: 8760.0 hours/yr

EMISSIONS REPORTS:

CONTROLLED REGENERATOR EMISSIONS

Component	lbs/hr	lbs/day	tons/yr
Methane	0.1159	2.781	0.5075
Ethane	0.0349	0.838	0.1530
Propane	0.0329	0.790	0.1442
Isobutane	0.0101	0.242	0.0442
n-Butane	0.0187	0.449	0.0819
Isopentane	0.0091	0.217	0.0397
n-Pentane	0.0083	0.200	0.0365
Cyclopentane	0.0019	0.045	0.0082
n-Hexane	0.0059	0.142	0.0259
Cyclohexane	0.0110	0.264	0.0481
Other Hexanes	0.0101	0.242	0.0442
Heptanes	0.0199	0.477	0.0871
Methylcyclohexane	0.0232	0.556	0.1015
Benzene	0.0297	0.712	0.1300
Toluene	0.0915	2.197	0.4009
Ethylbenzene	0.0075	0.181	0.0330
Xylenes	0.0768	1.842	0.3362
C8+ Heavies	0.1390	3.335	0.6086
Total Emissions	0.6463	15.511	2.8307
Total Hydrocarbon Emissions	0.6463	15.511	2.8307
Total VOC Emissions	0.4955	11.892	2.1702
Total HAP Emissions	0.2114	5.074	0.9260
Total BTEX Emissions	0.2055	4.932	0.9001

UNCONTROLLED REGENERATOR EMISSIONS

Component	lbs/hr	lbs/day	tons/yr
Methane	5.7934	139.043	25.3753
Ethane	1.7462	41.908	7.6483
Propane	1.6467	39.520	7.2124
Isobutane	0.5044	12.105	2.2091
n-Butane	0.9347	22.432	4.0939
Isopentane	0.4527	10.864	1.9827
n-Pentane	0.4162	9.990	1.8231
Cyclopentane	0.0935	2.244	0.4095
n-Hexane	0.2962	7.108	1.2971
Cyclohexane	0.5495	13.187	2.4066
Other Hexanes	0.5046	12.111	2.2102
Heptanes	0.9948	23.875	4.3571
Methylcyclohexane	1.1584	27.801	5.0737
Benzene	1.4837	35.608	6.4985
Toluene	4.5768	109.844	20.0466
Ethylbenzene	0.3764	9.033	1.6486
Xylenes	3.8381	92.114	16.8108
C8+ Heavies	6.9475	166.741	30.4302
Total Emissions	32.3137	775.528	141.5339
Total Hydrocarbon Emissions	32.3137	775.528	141.5339
Total VOC Emissions	24.7740	594.577	108.5103
Total HAP Emissions	10.5712	253.708	46.3017
Total BTEX Emissions	10.2750	246.600	45.0045

EQUIPMENT REPORTS:

COMBUSTION DEVICE

Ambient Temperature: 65.00 deg. F
Excess Oxygen: 0.00 %
Combustion Efficiency: 98.00 %
Supplemental Fuel Requirement: 1.38e-001 MM BTU/hr

Component	Emitted	Destroyed
Methane	2.00%	98.00%
Ethane	2.00%	98.00%
Propane	2.00%	98.00%
Isobutane	2.00%	98.00%
n-Butane	2.00%	98.00%
Isopentane	2.00%	98.00%
n-Pentane	2.00%	98.00%
Cyclopentane	2.00%	98.00%
n-Hexane	2.00%	98.00%
Cyclohexane	2.00%	98.00%
Other Hexanes	2.00%	98.00%
Heptanes	2.00%	98.00%
Methylcyclohexane	2.00%	98.00%
Benzene	2.00%	98.00%
Toluene	2.00%	98.00%
Ethylbenzene	2.00%	98.00%
Xylenes	2.00%	98.00%
C8+ Heavies	2.00%	98.00%

ABSORBER

Calculated Absorber Stages: 1.52
Specified Dry Gas Dew Point: 7.00 lbs. H2O/MMSCF
Temperature: 81.0 deg. F
Pressure: 149.0 psig
Dry Gas Flow Rate: 4.5000 MMSCF/day
Glycol Losses with Dry Gas: 0.0103 lb/hr
Wet Gas Water Content: Saturated
Calculated Wet Gas Water Content: 158.80 lbs. H2O/MMSCF
Calculated Lean Glycol Recirc. Ratio: 4.04 gal/lb H2O

Component	Remaining in Dry Gas	Absorbed in Glycol
Water	4.39%	95.61%
Carbon Dioxide	99.86%	0.14%
Nitrogen	99.99%	0.01%
Methane	99.99%	0.01%
Ethane	99.96%	0.04%
Propane	99.92%	0.08%
Isobutane	99.86%	0.14%
n-Butane	99.81%	0.19%
Isopentane	99.77%	0.23%
n-Pentane	99.70%	0.30%
Cyclopentane	98.76%	1.24%
n-Hexane	99.39%	0.61%
Cyclohexane	97.46%	2.54%
Other Hexanes	99.56%	0.44%
Heptanes	98.61%	1.39%
Methylcyclohexane	96.53%	3.47%
Benzene	79.20%	20.80%
Toluene	66.93%	33.07%
Ethylbenzene	48.87%	51.13%
Xylenes	37.05%	62.95%
C8+ Heavies	90.40%	9.60%

REGENERATOR

No Stripping Gas used in regenerator.

Component	Remaining in Glycol	Distilled Overhead
Water	36.12%	63.88%
Carbon Dioxide	0.00%	100.00%
Nitrogen	0.00%	100.00%
Methane	0.00%	100.00%
Ethane	0.00%	100.00%
Propane	0.00%	100.00%
Isobutane	0.00%	100.00%
n-Butane	0.00%	100.00%
Isopentane	0.37%	99.63%
n-Pentane	0.39%	99.61%
Cyclopentane	0.47%	99.53%
n-Hexane	0.44%	99.56%
Cyclohexane	3.10%	96.90%
Other Hexanes	0.85%	99.15%
Heptanes	0.47%	99.53%
Methylcyclohexane	3.91%	96.09%
Benzene	4.98%	95.02%
Toluene	7.88%	92.12%
Ethylbenzene	10.39%	89.61%
Xylenes	12.89%	87.11%
C8+ Heavies	11.92%	88.08%

STREAM REPORTS:

WET GAS STREAM

Temperature: 81.00 deg. F
Pressure: 163.70 psia
Flow Rate: 1.88e+005 scfh

Component	Conc. (vol%)	Loading (lb/hr)
Water	3.35e-001	2.99e+001
Carbon Dioxide	6.95e-001	1.52e+002
Nitrogen	4.78e-001	6.64e+001
Methane	8.04e+001	6.40e+003
Ethane	9.97e+000	1.49e+003
Propane	4.63e+000	1.01e+003
Isobutane	8.07e-001	2.33e+002
n-Butane	1.21e+000	3.48e+002
Isopentane	4.04e-001	1.45e+002
n-Pentane	3.04e-001	1.09e+002
Cyclopentane	2.03e-002	7.07e+000
n-Hexane	1.01e-001	4.30e+001
Cyclohexane	5.02e-002	2.10e+001
Other Hexanes	2.25e-001	9.62e+001
Heptanes	1.36e-001	6.74e+001
Methylcyclohexane	6.69e-002	3.26e+001
Benzene	1.83e-002	7.11e+000
Toluene	3.02e-002	1.38e+001
Ethylbenzene	1.40e-003	7.35e-001
Xylenes	1.16e-002	6.09e+000
C8+ Heavies	8.49e-002	7.18e+001
Total Components	100.00	1.04e+004

DRY GAS STREAM

Temperature: 81.00 deg. F
Pressure: 163.70 psia
Flow Rate: 1.88e+005 scfh

Component	Conc. (vol%)	Loading (lb/hr)
Water	1.47e-002	1.31e+000
Carbon Dioxide	6.96e-001	1.51e+002
Nitrogen	4.80e-001	6.64e+001
Methane	8.07e+001	6.40e+003
Ethane	1.00e+001	1.49e+003
Propane	4.65e+000	1.01e+003
Isobutane	8.09e-001	2.32e+002
n-Butane	1.21e+000	3.48e+002
Isopentane	4.05e-001	1.44e+002
n-Pentane	3.05e-001	1.09e+002
Cyclopentane	2.02e-002	6.99e+000
n-Hexane	1.00e-001	4.27e+001
Cyclohexane	4.91e-002	2.04e+001
Other Hexanes	2.25e-001	9.58e+001
Heptanes	1.34e-001	6.64e+001
Methylcyclohexane	6.48e-002	3.14e+001
Benzene	1.46e-002	5.63e+000
Toluene	2.03e-002	9.24e+000
Ethylbenzene	6.84e-004	3.59e-001
Xylenes	4.30e-003	2.26e+000
C8+ Heavies	7.71e-002	6.49e+001
Total Components	100.00	1.03e+004

LEAN GLYCOL STREAM

Temperature: 81.00 deg. F
Flow Rate: 1.92e+000 gpm

Component	Conc. (wt%)	Loading (lb/hr)
TEG	9.83e+001	1.06e+003
Water	1.50e+000	1.62e+001
Carbon Dioxide	2.01e-012	2.16e-011
Nitrogen	5.36e-014	5.78e-013
Methane	1.76e-018	1.90e-017
Ethane	2.32e-008	2.50e-007
Propane	3.09e-009	3.33e-008
Isobutane	8.74e-010	9.42e-009
n-Butane	1.50e-009	1.61e-008
Isopentane	1.56e-004	1.68e-003
n-Pentane	1.53e-004	1.64e-003
Cyclopentane	4.09e-005	4.41e-004
n-Hexane	1.22e-004	1.31e-003
Cyclohexane	1.63e-003	1.76e-002
Other Hexanes	3.99e-004	4.30e-003
Heptanes	4.38e-004	4.72e-003
Methylcyclohexane	4.37e-003	4.71e-002
Benzene	7.22e-003	7.78e-002
Toluene	3.63e-002	3.92e-001
Ethylbenzene	4.05e-003	4.36e-002
Xylenes	5.27e-002	5.68e-001
C8+ Heavies	8.72e-002	9.40e-001
Total Components	100.00	1.08e+003

RICH GLYCOL AND PUMP GAS STREAM

Temperature: 81.00 deg. F
Pressure: 163.70 psia
Flow Rate: 2.04e+000 gpm
NOTE: Stream has more than one phase.

Component	Conc. (wt%)	Loading (lb/hr)
TEG	9.30e+001	1.06e+003
Water	3.93e+000	4.48e+001
Carbon Dioxide	2.99e-002	3.40e-001
Nitrogen	5.28e-003	6.01e-002
Methane	5.09e-001	5.79e+000
Ethane	1.53e-001	1.75e+000
Propane	1.45e-001	1.65e+000
Isobutane	4.43e-002	5.04e-001
n-Butane	8.21e-002	9.35e-001
Isopentane	3.99e-002	4.54e-001
n-Pentane	3.67e-002	4.18e-001
Cyclopentane	8.25e-003	9.39e-002
n-Hexane	2.61e-002	2.97e-001
Cyclohexane	4.98e-002	5.67e-001
Other Hexanes	4.47e-002	5.09e-001
Heptanes	8.78e-002	1.00e+000
Methylcyclohexane	1.06e-001	1.21e+000
Benzene	1.37e-001	1.56e+000
Toluene	4.36e-001	4.97e+000
Ethylbenzene	3.69e-002	4.20e-001
Xylenes	3.87e-001	4.41e+000
C8+ Heavies	6.93e-001	7.89e+000
Total Components	100.00	1.14e+003

REGENERATOR OVERHEADS STREAM

Temperature: 212.00 deg. F
Pressure: 14.70 psia
Flow Rate: 8.65e+002 scfh

Component	Conc. (vol%)	Loading (lb/hr)
Water	6.97e+001	2.86e+001
Carbon Dioxide	3.39e-001	3.40e-001
Nitrogen	9.41e-002	6.01e-002
Methane	1.58e+001	5.79e+000
Ethane	2.55e+000	1.75e+000
Propane	1.64e+000	1.65e+000
Isobutane	3.81e-001	5.04e-001
n-Butane	7.05e-001	9.35e-001
Isopentane	2.75e-001	4.53e-001
n-Pentane	2.53e-001	4.16e-001
Cyclopentane	5.85e-002	9.35e-002
n-Hexane	1.51e-001	2.96e-001
Cyclohexane	2.86e-001	5.49e-001
Other Hexanes	2.57e-001	5.05e-001
Heptanes	4.35e-001	9.95e-001
Methylcyclohexane	5.18e-001	1.16e+000
Benzene	8.33e-001	1.48e+000
Toluene	2.18e+000	4.58e+000
Ethylbenzene	1.56e-001	3.76e-001
Xylenes	1.59e+000	3.84e+000
C8+ Heavies	1.79e+000	6.95e+000
Total Components	100.00	6.13e+001

COMBUSTION DEVICE OFF GAS STREAM

Temperature: 1000.00 deg. F
Pressure: 14.70 psia
Flow Rate: 5.17e+000 scfh

Component	Conc. (vol%)	Loading (lb/hr)
Methane	5.30e+001	1.16e-001
Ethane	8.52e+000	3.49e-002
Propane	5.48e+000	3.29e-002
Isobutane	1.27e+000	1.01e-002
n-Butane	2.36e+000	1.87e-002
Isopentane	9.21e-001	9.05e-003
n-Pentane	8.47e-001	8.32e-003
Cyclopentane	1.96e-001	1.87e-003
n-Hexane	5.04e-001	5.92e-003
Cyclohexane	9.58e-001	1.10e-002
Other Hexanes	8.59e-001	1.01e-002
Heptanes	1.46e+000	1.99e-002
Methylcyclohexane	1.73e+000	2.32e-002
Benzene	2.79e+000	2.97e-002
Toluene	7.29e+000	9.15e-002
Ethylbenzene	5.20e-001	7.53e-003
Xylenes	5.31e+000	7.68e-002
C8+ Heavies	5.99e+000	1.39e-001
Total Components	100.00	6.46e-001

ATTACHMENT 4

REGULATORY APPLICABILITY

SYNTHETIC MINOR LIMIT APPLICATION

JICARILLA COMPRESSOR STATION

XTO ENERGY, INC.

XTO Energy, Inc.
Jicarilla Compressor Station
Heaters
Summary of Applicable Rules

Heater No.	Description	Construction Date	Fuel Fired	Design Heat Capacity based on LHV		
				MMBTU/yr	MMBTU/day	MMBTU/hr
H1	Tank Heater	Pre 7/2002	Fuel Gas	4,380.00	12	0.5
H2	Tank Heater	Pre 7/2003	Fuel Gas	4,380.00	12	0.5
H3	Separator Heater	Pre 7/2004	Fuel Gas	4,380.00	12	0.5
H4	Dehy Heater	Pre 7/2005	Fuel Gas	8,760.00	24	1.0

XTO Energy, Inc.
Jicarilla Compressor Station
Heaters
Summary of Applicable Rules

Heater No.	Description	NSPS D	NSPS Db	NSPS Dc	MACT DDDDD
H1	Tank Heater	NO	NO	NO	NO
H2	Tank Heater	NO	NO	NO	NO
H3	Separator Heater	NO	NO	NO	NO
H4	Dehy Heater	NO	NO	NO	NO

XTO Energy, Inc.
Jicarilla Compressor Station
Heaters
NSPS D Applicability

Heater No.	Description	Fossil Fuel-Fired Steam Generating Unit?[1]	Construction Date After August 17, 1971	Fuel Type	Heat Input Capacity (MMBtu/hr)	Capacity >250 MMBtu/hr?	NSPS D Applicable	Applicability Note
H1	Tank Heater	YES	YES	Fuel Gas	0.5	NO	NO	Capacity below applicability threshold.
H2	Tank Heater	YES	YES	Fuel Gas	0.5	NO	NO	Capacity below applicability threshold.
H3	Separator Heater	YES	YES	Fuel Gas	0.5	NO	NO	Capacity below applicability threshold.
H4	Dehy Heater	YES	YES	Fuel Gas	1.0	NO	NO	Capacity below applicability threshold.

[1] Per §60.41(a), fossil-fuel fired steam generating unit means a furnace or boiler used in the process of burning fossil fuel for the purpose of producing steam by heat transfer.

XTO Energy, Inc.
Jicarilla Compressor Station
Heaters
NSPS Db Applicability

Heater No.	Description	Steam Generating Unit?[1]	Construction Date after June 19, 1984	Fuel Type	Heat Input Capacity (MMBtu/hr)	Capacity >100 MMBtu/hr?	NSPS Db Applicable?	Applicability Note
H1	Tank Heater	YES	YES	Fuel Gas	0.5	NO	NO	Capacity below applicability threshold.
H2	Tank Heater	YES	YES	Fuel Gas	0.5	NO	NO	Capacity below applicability threshold.
H3	Separator Heater	YES	YES	Fuel Gas	0.5	NO	NO	Capacity below applicability threshold.
H4	Dehy Heater	YES	YES	Fuel Gas	1.0	NO	NO	Capacity below applicability threshold.

[1] Per §60.41b, steam generating unit means a device that combusts any fuel or byproduct/waste to produce steam or to heat water or any other heat transfer medium. This term does not include process heaters.

§60.41b defines a process heater as a device that is primarily used to heat a material to initiate or promote a chemical reaction in which the material participates as a reactant or a catalyst.

XTO Energy, Inc.
Jicarilla Compressor Station
Heaters
NSPS Dc Applicability

Heater No.	Description	Steam Generating Unit?[1]	Construction Date After June 9, 1989	Fuel Type	Heat Input Capacity (MMBtu/hr)	Capacity ≥10 and ≤100 MMBtu/hr?	NSPS Dc Applicable?	Applicability Note
H1	Tank Heater	YES	YES	Fuel Gas	0.5	NO	NO	Capacity below applicability threshold.
H2	Tank Heater	YES	YES	Fuel Gas	0.5	NO	NO	Capacity below applicability threshold.
H3	Separator Heater	YES	YES	Fuel Gas	0.5	NO	NO	Capacity below applicability threshold.
H4	Dehy Heater	YES	YES	Fuel Gas	1.0	NO	NO	Capacity below applicability threshold.

[1] Per §60.41c, steam generating unit means a device that combusts any fuel and produces steam or heats water or any other heat transfer medium. This term does not include process heaters. §60.41c defines process heater as a device that is primarily used to heat a material to initiate or promote a chemical reaction in which the material participates as a reactant or a catalyst.

XTO Energy, Inc.
Jicarilla Compressor Station
Heaters
Negative Applicability Summary

	NSPS D		NSPS Db		NSPS Dc		MACT DDDDD	
Heater No.	**Negative Citation**	**Negative Applicability Reason**	**Negative Citation**	**Negative Applicability Reason**	**Negative Citation**	**Negative Applicability Reason**	**Negative Citation**	**Negative Applicability Reason**
H1	§60.40(a)(1)	Capacity <250 MMBtu/hr.	§60.40b(a)	Capacity <100 MMBtu/hr.	§60.40c(a)	The capacity is not ≥ 10 and ≤100 MMBtu/hr	N/A	Not a major source of HAP
H2	§60.40(a)(1)	Capacity <250 MMBtu/hr.	§60.40b(a)	Capacity <100 MMBtu/hr.	§60.40c(a)	The capacity is not ≥ 10 and ≤100 MMBtu/hr	N/A	Not a major source of HAP
H3	§60.40(a)(1)	Capacity <250 MMBtu/hr.	§60.40b(a)	Capacity <100 MMBtu/hr.	§60.40c(a)	The capacity is not ≥ 10 and ≤100 MMBtu/hr	N/A	Not a major source of HAP
H4	§60.40(a)(1)	Capacity <250 MMBtu/hr.	§60.40b(a)	Capacity <100 MMBtu/hr.	§60.40c(a)	The capacity is not ≥ 10 and ≤100 MMBtu/hr	N/A	Not a major source of HAP

XTO Energy, Inc.
Jicarilla Compressor Station
Tanks
Summary of Applicable Rules

Unit ID	Description	Content	Construction Date	Design Capacity (BBL)	Max Throughput		
					BBL/yr	BBL/day	BBL/hr
TK1	Condensate Tank	Condensate from inlet Separtor	Pre 7/2002	400	1460	4	0.17
TK2	Condensate Tank	Condensate from inlet Separtor	Pre 7/2002	400	1460	4	0.17
TK3	Produced Water	Produced Water from Inlet Separator & Engine Scrubber	Pre 7/2002	100	1460	4	0.17
TK4	Produced Water	Produced Water from Inlet Separator & Engine Scrubber	Pre 7/2002	100	1460	4	0.17
TK5	Produced Water	Produced Water from Dehy	Pre 7/2002	30	365	1	0.04
TK6	Produced Water	Produced Water from Dehy	Pre 7/2002	30	365	1	0.04

XTO Energy, Inc.
Jicarilla Compressor Station
Tanks
Summary of Applicable Rules

Tank No.	NSPS K	NSPS Ka	NSPS Kb
TK1	NO	NO	NO
TK2	NO	NO	NO
TK3	NO	NO	NO
TK4	NO	NO	NO
TK5	NO	NO	NO
TK6	NO	NO	NO

XTO Energy, Inc.
Jicarilla Compressor Station
Tanks
NSPS Kb Applicability

Tank No.	Construction Date	Capacity (gal)	Typical Material Stored	Const./Mod. after 7/23/84 ?	Capacity > 20,000 gal?	Are Petroleum Liquids Stored?	TVP ≥ 1.5 psia?	RVP < 1.0 psia AND max TVP ≤ 1.0 psia?	NSPS Kb Applicable?
TK1	2004	16,800	Volatile organic liquid	YES	NO				NO
TK2	2004	16,800	Volatile organic liquid	YES	NO				NO
TK3	2004	4,200	Volatile organic liquid	YES	NO				NO
TK4	2004	4,200	Volatile organic liquid	YES	NO				NO
TK5	2004	1,260	Volatile organic liquid	YES	NO				NO
TK6	2004	1,260	Volatile organic liquid	YES	NO				NO

XTO Energy, Inc.
Jicarilla Compressor Station
Tanks
Negative Applicability Summary

Tank No.	NSPS K		NSPS Ka		NSPS Kb	
	Negative Citation	Negative Applicability Reason	Negative Citation	Negative Applicability Reason	Negative Citation	Negative Applicability Reason
TK1-TK6	§60.110(a)(2)	Not constructed between June 11, 1973 and May 19, 1978	§60.110a(a)	Not constructed between May 18, 1978 and July 23,1984	§60.110b(a)	Capacity is not > 20,000 gal

XTO Energy, Inc.
Jicarilla Compressor Station
Dehydration Unit
MACT HH Applicability

Unit No.	Description	Construction Date	Max Throughput (MMSCF/D)	Manufacturer	Control Equipment
DEHY-1	TEG Dehydrator	Pre 7/2002	4.5	Pesco	FLARE-1

XTO Energy, Inc.
Jicarilla Compressor Station
Dehydration Unit
Summary of Applicable Rules

Unit No.	Description	MACT HH
DEHY-1	TEG Dehydrator	YES

XTO Energy, Inc.
Jicarilla Compressor Station
Dehydration Unit
MACT HH Applicability

Unit No.	Description	Gas Throughput (MMscf/day)	Gas Throughput Less than 85,000 scm/day (3,000,000 scf/day)	Benzene Emissions (tpy)	Benzene Emission less than 0.90 Mg/yr (1.0 tpy)	MACT HH Applicable?
DEHY-1	TEG Dehydrator	4.5	NO	0.13	YES	YES

XTO Energy, Inc.
Jicarilla Compressor Station
Dehydration Unit
Applicable Requirements

Unit No.	Description	Federal Rule	Standard	Monitoring/Testing Requirements	Recordkeeping Requirements	Reporting Requirements	Test methods, compliance procedures, and compliance demonstrations.
DEHY-1	TEG Dehydrator	MACT HH	§63.764(e)(1) - the affected area source is exempt from general standard control requirements for either throughput (§63.764(e)(1)(i)) or benzene concentration (§63.764(e)(1)(ii)). Benzene < 1.0 tpy	NONE	§63.774(d)(1) - maintenance of records to support the determination of exemption. §63.774(d)(1)(ii), for the actual average benzene emissions exemption.	NONE	§63.772(b) - determination of benzene emissions(§63.772(b)(2)). §63.772(b)(2)(i) - The owner or operator shall determine actual average benzene emissions using the model GRI-GLYCalcTM

XTO Energy, Inc.
Jicarilla Compressor Station
Engines
Summary of Applicable Rules

Engine No.	Description	Construction Date	Fuel Fired	Rated Capacity (hp)	Max Firing Rate			Manufacturer	Serial#
					MMBTU/yr	MMBTU/day	MMBTU/hr		
E1	Caterpillar 3512	6/19/2003	Fuel Gas	1004	62,371	171	7.12	Caterpillar	SN 7NJ00929
E2	Caterpillar 3512	6/25/2003	Fuel Gas	1004	62,371	171	7.12	Caterpillar	SN 7NJ00932

XTO Energy, Inc.
Jicarilla Compressor Station
Engines
Summary of Applicable Rules

Engine No.	Description	MACT ZZZZ	NSPS JJJJ
E1	Caterpillar 3512	YES	NO
E2	Caterpillar 3512	YES	NO

XTO Energy, Inc.
Jicarilla Compressor Station
Engines
MACT ZZZZ Applicability

Engine No.	Description	Brake HP	Construction Date	Stationary RICE type	Fuel Type	Major/Area Source of HAPs	New/Existing Source (Existing constructed before June 12, 2006)	MACT ZZZZ Applicable?
E1	Caterpillar 3512	1004	2003	4-Stroke, Lean-Burn	Fuel Gas	Area	Existing	YES
E2	Caterpillar 3512	1004	2003	4-Stroke, Lean-Burn	Fuel Gas	Area	Existing	YES

XTO Energy, Inc.
Jicarilla Compressor Station
Engines
NSPS JJJJ Applicability

Engine No.	Description	Brake HP	Construction Date	Construction Date After June 12, 2006	NSPS JJJJ Applicable?	Applicability Note
E1	Caterpillar 3512	1004	2003	NO	NO	NOT Subject §63.4230 (a)(4) owner and operators of stationary RICE that commence construction after June 12, 2006.
E2	Caterpillar 3512	1004	2003	NO	NO	NOT Subject §63.4230 (a)(4) owner and operators of stationary RICE that commence construction after June 12, 2006.

XTO Energy, Inc.
Jicarilla Compressor Station
Engines
Negative Applicability Summary

Engine No.	NSPS JJJJ		MACT ZZZZ	
	Negative Citation	Negative Applicability Reason	Negative Citation	Negative Applicability Reason
E1	§63.4230 (a)(4)	Not Constructed after June 12, 2006	N/A	Subject
E2	§63.4230 (a)(4)	Not Constructed after June 12, 2006	N/A	Subject

XTO Energy, Inc.
Jicarilla Compressor Station
Engines
Applicability Requirements

Engine No.	Description	Federal Rule	Affected Source and Compliance Date	Standard	Monitoring/Testing Requirements	Recordkeeping Requirements	Reporting Requirements
E1 and E2	Caterpillar 3512	MACT ZZZZ	§63.6590(a)(1)(iii) - area source of HAP and existing RICE if construction date prior to June 12, 2006. §63.6595(a)(1) existing area source must comply with the applicable emissions and operating limitation by October 19, 2013	§63.6603(a) comply with requirements in Table 2d and Table 2b §63.6605(a) and (b) general requirements	§63.6612 (a) conduct initial performance test according to Tables 4 and 5. §63.6615 conduct subsequent performance testing as specified in Table 3 of this subpart. §63.6625(h) minimize engine idle time during startup and limit startup time to 30 minutes.	§63.6655(a)(1)-(5) must keep described records for at least 5 years §63.6655(d) keep records of continuous compliance as required in Table 6.	§63.6645(a) Initial notification §63.7(b) & §63.9(e) notification of performance test §63.9(b) Notification of rule relevance §63.9(g) Notification of Compliance Status. §63.6650(a) submit compliance reports in Table 7 §63.6650(b) Compliance reporting periods and due dates

ATTACHMENT 5

SCREEN3 MODELING

SYNTHETIC MINOR LIMIT APPLICATION

JICARILLA COMPRESSOR STATION

XTO ENERGY, INC.

ATTACHMENT 5
MODELING DESCRIPTION

Modeling was performed by using the SCREEN3 model. A summary of the CO modeling results are shown in Table 6-1. Although the site is not regulated by the New Mexico Environment Department (NMED), their modeling guidelines were used to evaluate environmental impacts. The Station's total PM and SO_2 lb/hr emission rates are less than the 1-lb/hr threshold, meeting the very small emission rate modeling waiver shown in Table 1 of the New Mexico Air Quality Bureau Air Dispersion Modeling Guidelines Revised July 29, 2011. Also, according to Table 4 of the NMED modeling guidelines, NO_x emissions are exempt from modeling requirements, since the site potential to emit (PTE) is less than 40 tpy.

The site location has an elevation of approximately 6550 feet. A ridge is located northeast of the site, which reaches a maximum elevation of approximately 6615 feet. The complex terrain model option in SCREEN3 was used for elevations above stack height, and the simple terrain option in SCREEN3 was used for elevations between the stack base and height. Concentrations from the complex terrain option are provided as 24-hour averages. Page 53 of the SCREEN3 User Guide indicates that valley screening values are multiplied by 0.25 to obtain the 24-hr average concentrations. Therefore, the 24-hour average values were converted back to 1-hour concentrations by multiplying the value by 4.

The NMED guidelines indicate that pollutants with a site PTE less than 100 tpy and have an impact below significance levels, which are defined in 20.2.72.500 NMAC, for the pollutant are not required to perform additional air dispersion modeling. Maximum CO impacts for all sources were summed and the total impact is below both the 1-hour and 8-hour NMED CO significance level.

Table 5-1

XTO Energy, Inc.

Jicarilla Compressor Station

Application for Synthetic Minor Limit

Summary of Screen3 CO Modeling Results

FIN	EPN	Description	$PTE_{(CO,HR)}$[a] (lb/hr)	$C_{(CO,HR)}$[b] (µg/m³)	1-hr $GLC_{(CO,1-HR)}$[c] (µg/m³)	8-hr $GLC_{(CO,8-HR)}$[d] (µg/m³)
E1	E1	Compressor Engine 1	5.36	27.57	147.78	103.45
E2	E2	Compressor Engine 2	5.36	27.57	147.78	103.45
H1	H1	Heater 1	0.04	1484.00	59.36	41.55
H2	H2	Heater 2	0.04	1484.00	59.36	41.55
H3	H3	Heater 3	0.04	1484.00	59.36	41.55
H4	H4	Heater 4	0.08	903.20	72.26	50.58
FLARE 1	FLARE 1	Flare 1	0.29	190.84	55.34	38.74
			Total CO Concentration (µg/m³):		**601**	**421**
			CO Significance Level (µg/m³)[e]:		**2,000**	**500**

Modeling was conducted in accordance with the NMED Air Quality Bureau Air Dispersion Modeling Guidelines, dated July 29, 2011 and Screening Procedures for Estimating the Air Quality Impact of Stationary Sources, dated October 1992.

[a] $PTE_{(NO_X,HR)}$ = Hourly PTE CO.

[b] $C_{(CO,HR)}$ = Maximum hourly CO concentration predicted by SCREEN3 model, using a nominal 1 lb/hr emission rate. Complex terrain 24-hour concentrations are multiplied by 4 to obtain a 1-hour concentration. The Valley screening value is multiplied by 0.25 to obtain a 24-hr average result with the complex terrain modeling option as indicated on Page 53 of the SCREEN3 User Guide.

[c] $GLC_{(CO,1-HR)}$ = Maximum hourly ground level concentration of CO.
An example calculation for FIN E1 follows:
GLC(CO,1-HR) = PTE(CO,HR) * C(CO,HR) = (5.36 lb/hr) * (27.57 µg/m³ / lb/hr) = 147.78 µg/m³

[d] $GLC_{(CO,8-HR)}$ = Maximum 8-hour ground level concentration of CO.
The 8-hr screen factor is obtained from page 17 of EPA-454/R-92-019 "Screening Procedures for Estimating the Air Quality Impact of Station Sources, Revised". An example calculation for FIN E1 follows:
GLC(CO,8-HR) = GLC(CO-1-HR) * SF = 147.78 µg/m³ * 0.7 = 103.45 µg/m³

[e] The 1-hr and 8-hr CO Significance Levels are based on NMAC §20.2.72.500 Table 1 - Significant Ambient Concentrations.

```
****** SCREEN3 MODEL ******
**** VERSION DATED 96043 ****

ENTER TITLE FOR THIS RUN (UP TO 79 CHARACTERS):
Jicarilla Compressor Station EPN E1 and E2

ENTER SOURCE TYPE: P   FOR POINT
           F   FOR FLARE
           A   FOR AREA
           V   FOR VOLUME
  ALSO ENTER ANY OF THE FOLLOWING OPTIONS ON THE SAME LINE:

   N   - TO USE THE NON-REGULATORY BUT CONSERVATIVE BRODE 2
         MIXING HEIGHT OPTION,
   nn.n - TO USE AN ANEMOMETER HEIGHT OTHER THAN THE REGULATORY
         (DEFAULT) 10 METER HEIGHT.
   SS  - TO USE A NON-REGULATORY CAVITY CALCULATION ALTERNATIVE
  Example - PN 7.0 SS (entry for a point source)

  ENTER SOURCE TYPE AND ANY OF THE ABOVE OPTIONS:
  p
  ENTER EMISSION RATE (G/S):
  0.126
  ENTER STACK HEIGHT (M):
  6.4
  ENTER STACK INSIDE DIAMETER (M):
  0.46
  ENTER STACK GAS EXIT VELOCITY OR FLOW RATE:
  OPTION 1 : EXIT VELOCITY (M/S):
   DEFAULT - ENTER NUMBER ONLY
  OPTION 2 : VOLUME FLOW RATE (M**3/S):
        EXAMPLE "VM=20.00"
  OPTION 3 : VOLUME FLOW RATE (ACFM):
        EXAMPLE "VF=1000.00"
  29.3
  ENTER STACK GAS EXIT TEMPERATURE (K):
  720
  ENTER AMBIENT AIR TEMPERATURE (USE 293 FOR DEFAULT) (K):
  280
  ENTER RECEPTOR HEIGHT ABOVE GROUND (FOR FLAGPOLE RECEPTOR) (M):
  0
  ENTER URBAN/RURAL OPTION (U=URBAN, R=RURAL):
  r
  CONSIDER BUILDING DOWNWASH IN CALCS?  ENTER Y OR N:
  n
  USE COMPLEX TERRAIN SCREEN FOR TERRAIN ABOVE STACK HEIGHT?
  ENTER Y OR N:
  y
```

FINAL STABLE PLUME HEIGHT (M) = 44.0
DISTANCE TO FINAL RISE (M) = 147.9

MAXIMUM CONCENTRATIONS ARE EXPECTED TO OCCUR DUE TO PLUME IMPACTION.
THEREFORE ENTER MINIMUM DISTANCES AND TERRAIN HEIGHTS FOR WHICH
IMPACTION IS LIKELY, TAKING INTO ACCOUNT TERRAIN CLOSER THAN
THE DISTANCE TO FINAL RISE.
FOR TERRAIN BELOW PLUME HEIGHT, SIMPLE TERRAIN AND VALLEY 24-HR
CALCULATIONS ARE BOTH MADE AND THE MAXIMUM SELECTED.

ENTER TERRAIN HEIGHT ABOVE STACK BASE (M),
AND DISTANCE TO TERRAIN (M) (ZEROES TO EXIT):
9,153

TERR HT (M)	DIST (M)	MAX 24-HR CONC (UG/M**3)	*VALLEY 24-HR CALCS* CONC (UG/M**3)	PLUME HT ABOVE STK BASE (M)	**SIMPLE TERRAIN 24-HR CALCS** CONC (UG/M**3)	PLUME HT ABOVE STK HGT (M)	U10M	USTK SC (M/S)	
9.	153.	6.892	.1161	44.0	6.892	7.6	4	15.0	15.0

ENTER TERRAIN HEIGHT ABOVE STACK BASE (M),
AND DISTANCE TO TERRAIN (M) (ZEROES TO EXIT):
12,180

12.	180.	5.966	.2393	44.0	5.966	7.6	4	15.0	15.0

ENTER TERRAIN HEIGHT ABOVE STACK BASE (M),
AND DISTANCE TO TERRAIN (M) (ZEROES TO EXIT):
15,246

15.	246.	4.446	.4242	44.0	4.446	11.4	4	10.0	10.0

ENTER TERRAIN HEIGHT ABOVE STACK BASE (M),
AND DISTANCE TO TERRAIN (M) (ZEROES TO EXIT):
18,279

18.	279.	3.984	.7260	44.0	3.984	11.4	4	10.0	10.0

ENTER TERRAIN HEIGHT ABOVE STACK BASE (M),
AND DISTANCE TO TERRAIN (M) (ZEROES TO EXIT):
20,312

20.	312.	3.562	.9708	44.0	3.562	14.2	4	8.0	8.0

ENTER TERRAIN HEIGHT ABOVE STACK BASE (M),
AND DISTANCE TO TERRAIN (M) (ZEROES TO EXIT):
0
0,0

COMPLEX TERRAIN CALCULATIONS DONE.
CONTINUE WITH SIMPLE TERRAIN CALCULATIONS? ENTER Y OR N:

```
y
USE SIMPLE TERRAIN SCREEN WITH TERRAIN ABOVE STACK BASE?
ENTER Y OR N:
y
ENTER CHOICE OF METEOROLOGY;
1 - FULL METEOROLOGY (ALL STABILITIES & WIND SPEEDS)
2 - INPUT SINGLE STABILITY CLASS
3 - INPUT SINGLE STABILITY CLASS AND WIND SPEED
1
USE AUTOMATED DISTANCE ARRAY? ENTER Y OR N:
y
ENTER TERRAIN HEIGHT ABOVE STACK BASE (M):
3
ENTER MIN AND MAX DISTANCES TO USE (M):
0 55

**********************************
*** SCREEN AUTOMATED DISTANCES ***
**********************************

*** TERRAIN HEIGHT OF   3. M ABOVE STACK BASE USED FOR FOLLOWING DISTANCES ***

 DIST   CONC        U10M  USTK  MIX HT  PLUME  SIGMA  SIGMA
  (M)  (UG/M**3)  STAB  (M/S)  (M/S)   (M)  HT (M)  Y (M)  Z (M)  DWASH
 ------- ---------- ---- ----- ----- ------ ------ ------ ------ -----
   1.  .0000     1   1.0   1.0  320.0 117.39   2.13   2.10   NO
 ITERATING TO FIND MAXIMUM CONCENTRATION . . .

 MAXIMUM 1-HR CONCENTRATION AT OR BEYOND   1. M:
   1.  .0000     0    .0    .0    .0   .00   .00   .00

 CONTINUE SIMPLE TERRAIN AUTOMATED CALCS WITH NEW TERRAIN HEIGHT?
 ENTER Y OR N:
 y
 ENTER TERRAIN HEIGHT ABOVE STACK BASE (M):
 6
 ENTER MIN AND MAX DISTANCES TO USE (M):
 55 95

 **********************************
 *** SCREEN AUTOMATED DISTANCES ***
 **********************************

 *** TERRAIN HEIGHT OF   6. M ABOVE STACK BASE USED FOR FOLLOWING DISTANCES ***

  DIST   CONC        U10M  USTK  MIX HT  PLUME  SIGMA  SIGMA
   (M)  (UG/M**3)  STAB  (M/S)  (M/S)   (M)  HT (M)  Y (M)  Z (M)  DWASH
  ------- ---------- ---- ----- ----- ------ ------ ------ ------ -----
```

```
  55.  15.35      4   20.0  20.0 6400.0   6.07   4.76   2.85   NO
ITERATING TO FIND MAXIMUM CONCENTRATION . . .

MAXIMUM 1-HR CONCENTRATION AT OR BEYOND   55. M:
  87.  23.29      4   20.0  20.0 6400.0   6.07   7.31   4.25   NO

CONTINUE SIMPLE TERRAIN AUTOMATED CALCS WITH NEW TERRAIN HEIGHT?
ENTER Y OR N:
n


USE DISCRETE DISTANCES?  ENTER Y OR N:
n

   ***************************************
   *** SUMMARY OF SCREEN MODEL RESULTS ***
   ***************************************

 CALCULATION       MAX CONC   DIST TO   TERRAIN
  PROCEDURE       (UG/M**3)   MAX (M)   HT (M)
--------------   -----------  -------  -------
 SIMPLE TERRAIN     23.29        87.      6.

 COMPLEX TERRAIN    6.892       153.      9. (24-HR CONC)


***************************************************
** REMEMBER TO INCLUDE BACKGROUND CONCENTRATIONS **
***************************************************

 DO YOU WANT TO PRINT A HARDCOPY OF THE RESULTS?  ENTER Y OR N:
```

```
****** SCREEN3 MODEL ******
**** VERSION DATED 96043 ****

ENTER TITLE FOR THIS RUN (UP TO 79 CHARACTERS):
Jicarilla Compressor Station EPN H1, H2, and H3

ENTER SOURCE TYPE: P    FOR POINT
           F    FOR FLARE
           A    FOR AREA
           V    FOR VOLUME
  ALSO ENTER ANY OF THE FOLLOWING OPTIONS ON THE SAME LINE:

   N    - TO USE THE NON-REGULATORY BUT CONSERVATIVE BRODE 2
          MIXING HEIGHT OPTION,
   nn.n - TO USE AN ANEMOMETER HEIGHT OTHER THAN THE REGULATORY
          (DEFAULT) 10 METER HEIGHT.
   SS   - TO USE A NON-REGULATORY CAVITY CALCULATION ALTERNATIVE
  Example - PN 7.0 SS (entry for a point source)

  ENTER SOURCE TYPE AND ANY OF THE ABOVE OPTIONS:
  p
  ENTER EMISSION RATE (G/S):
  0.126
  ENTER STACK HEIGHT (M):
  4.6
  ENTER STACK INSIDE DIAMETER (M):
  0.46
  ENTER STACK GAS EXIT VELOCITY OR FLOW RATE:
  OPTION 1 : EXIT VELOCITY (M/S):
   DEFAULT - ENTER NUMBER ONLY
  OPTION 2 : VOLUME FLOW RATE (M**3/S):
        EXAMPLE "VM=20.00"
  OPTION 3 : VOLUME FLOW RATE (ACFM):
        EXAMPLE "VF=1000.00"
  0.45
  ENTER STACK GAS EXIT TEMPERATURE (K):
  478
  ENTER AMBIENT AIR TEMPERATURE (USE 293 FOR DEFAULT) (K):
  280
  ENTER RECEPTOR HEIGHT ABOVE GROUND (FOR FLAGPOLE RECEPTOR) (M):
  0
  ENTER URBAN/RURAL OPTION (U=URBAN, R=RURAL):
  r
  CONSIDER BUILDING DOWNWASH IN CALCS?  ENTER Y OR N:
  n
  USE COMPLEX TERRAIN SCREEN FOR TERRAIN ABOVE STACK HEIGHT?
  ENTER Y OR N:
  y
```

```
FINAL STABLE PLUME HEIGHT (M) =  11.6
DISTANCE TO FINAL RISE (M)   = 147.9

MAXIMUM CONCENTRATIONS ARE EXPECTED TO OCCUR DUE TO PLUME IMPACTION.
THEREFORE ENTER MINIMUM DISTANCES AND TERRAIN HEIGHTS FOR WHICH
IMPACTION IS LIKELY, TAKING INTO ACCOUNT TERRAIN CLOSER THAN
THE DISTANCE TO FINAL RISE.
FOR TERRAIN BELOW PLUME HEIGHT, SIMPLE TERRAIN AND VALLEY 24-HR
CALCULATIONS ARE BOTH MADE AND THE MAXIMUM SELECTED.

ENTER TERRAIN HEIGHT ABOVE STACK BASE (M),
AND DISTANCE TO TERRAIN (M) (ZEROES TO EXIT):
6,95
                *VALLEY 24-HR CALCS*   **SIMPLE TERRAIN 24-HR CALCS**
 TERR      MAX 24-HR          PLUME HT          PLUME HT
  HT   DIST   CONC      CONC   ABOVE STK   CONC   ABOVE STK   U10M USTK
 (M)   (M)  (UG/M**3)  (UG/M**3)  BASE (M)  (UG/M**3)  HGT (M)  SC  (M/S)
----- ------- ---------- ---------- ------  ---------- ------ -- ---- ----
  6.   95. 371.0     .1876      9.5   371.0      2.7  4  1.0  1.0

ENTER TERRAIN HEIGHT ABOVE STACK BASE (M),
AND DISTANCE TO TERRAIN (M) (ZEROES TO EXIT):
9,153
  9.  153. 177.9     1.939     11.6   177.9      2.7  4  1.0  1.0

ENTER TERRAIN HEIGHT ABOVE STACK BASE (M),
AND DISTANCE TO TERRAIN (M) (ZEROES TO EXIT):
12, 180
 12.  180. 2.511     2.511     11.6   .0000      .0  0  .0  .0

ENTER TERRAIN HEIGHT ABOVE STACK BASE (M),
AND DISTANCE TO TERRAIN (M) (ZEROES TO EXIT):
15, 246
 15.  246. 3.401     3.401     11.6   .0000      .0  0  .0  .0

ENTER TERRAIN HEIGHT ABOVE STACK BASE (M),
AND DISTANCE TO TERRAIN (M) (ZEROES TO EXIT):
18, 279
 18.  279. 3.590     3.590     11.6   .0000      .0  0  .0  .0

ENTER TERRAIN HEIGHT ABOVE STACK BASE (M),
AND DISTANCE TO TERRAIN (M) (ZEROES TO EXIT):
20, 312
                *VALLEY 24-HR CALCS*   **SIMPLE TERRAIN 24-HR CALCS**
 TERR      MAX 24-HR          PLUME HT          PLUME HT
  HT   DIST   CONC      CONC   ABOVE STK   CONC   ABOVE STK   U10M USTK
 (M)   (M)  (UG/M**3)  (UG/M**3)  BASE (M)  (UG/M**3)  HGT (M)  SC  (M/S)
```

```
----- ------- ---------- ---------- ------ ---------- ------ -- ---- ----
 20.   312. 3.657     3.657      11.6   .0000        .0  0  .0  .0

ENTER TERRAIN HEIGHT ABOVE STACK BASE (M),
AND DISTANCE TO TERRAIN (M) (ZEROES TO EXIT):
0,0

COMPLEX TERRAIN CALCULATIONS DONE.
CONTINUE WITH SIMPLE TERRAIN CALCULATIONS?  ENTER Y OR N:
y
USE SIMPLE TERRAIN SCREEN WITH TERRAIN ABOVE STACK BASE?
ENTER Y OR N:
y
ENTER CHOICE OF METEOROLOGY;
1 - FULL METEOROLOGY (ALL STABILITIES & WIND SPEEDS)
2 - INPUT SINGLE STABILITY CLASS
3 - INPUT SINGLE STABILITY CLASS AND WIND SPEED
1
USE AUTOMATED DISTANCE ARRAY? ENTER Y OR N:
y
ENTER TERRAIN HEIGHT ABOVE STACK BASE (M):
1.5
ENTER MIN AND MAX DISTANCES TO USE (M):
34, 55

**********************************
*** SCREEN AUTOMATED DISTANCES ***
**********************************

*** TERRAIN HEIGHT OF   2. M ABOVE STACK BASE USED FOR FOLLOWING DISTANCES ***

 DIST    CONC          U10M   USTK  MIX HT   PLUME   SIGMA   SIGMA
  (M)  (UG/M**3)  STAB  (M/S)  (M/S)    (M)   HT (M)   Y (M)   Z (M)  DWASH
------- ---------- ---- ----- ----- ------ ------ ------ ------ -----
   34.  626.8      3    2.0   2.0  640.0   3.78   4.62   2.82   NO
ITERATING TO FIND MAXIMUM CONCENTRATION . . .

MAXIMUM 1-HR CONCENTRATION AT OR BEYOND   34. M:
   34.  626.8      3    2.0   2.0  640.0   3.78   4.62   2.82   NO

CONTINUE SIMPLE TERRAIN AUTOMATED CALCS WITH NEW TERRAIN HEIGHT?
ENTER Y OR N:
y
ENTER TERRAIN HEIGHT ABOVE STACK BASE (M):
3
ENTER MIN AND MAX DISTANCES TO USE (M):
55, 95
```

```
**********************************
*** SCREEN AUTOMATED DISTANCES ***
**********************************

*** TERRAIN HEIGHT OF   3. M ABOVE STACK BASE USED FOR FOLLOWING DISTANCES ***

 DIST    CONC          U10M   USTK  MIX HT  PLUME  SIGMA  SIGMA
  (M)  (UG/M**3)  STAB  (M/S)  (M/S)   (M)   HT (M)  Y (M)  Z (M)  DWASH
------- ---------- ---- ----- ----- ------ ------ ------ ------ -----
  55.  1143.      4   1.5   1.5  480.0   2.97   4.76   2.85   NO
ITERATING TO FIND MAXIMUM CONCENTRATION . . .

MAXIMUM 1-HR CONCENTRATION AT OR BEYOND   55. M:
  55.  1143.      4   1.5   1.5  480.0   2.97   4.76   2.85   NO

CONTINUE SIMPLE TERRAIN AUTOMATED CALCS WITH NEW TERRAIN HEIGHT?
ENTER Y OR N:
n


USE DISCRETE DISTANCES?  ENTER Y OR N:
n

   ***************************************
   *** SUMMARY OF SCREEN MODEL RESULTS ***
   ***************************************

 CALCULATION       MAX CONC   DIST TO   TERRAIN
  PROCEDURE       (UG/M**3)   MAX (M)   HT (M)
--------------   -----------  -------  -------
SIMPLE TERRAIN     1143.        55.      3.

COMPLEX TERRAIN    371.0        95.      6. (24-HR CONC)


****************************************************
** REMEMBER TO INCLUDE BACKGROUND CONCENTRATIONS **
****************************************************

DO YOU WANT TO PRINT A HARDCOPY OF THE RESULTS?  ENTER Y OR N:
```

```
****** SCREEN3 MODEL ******
**** VERSION DATED 96043 ****

ENTER TITLE FOR THIS RUN (UP TO 79 CHARACTERS):
Jicarilla Compressor Station EPN H4

ENTER SOURCE TYPE: P    FOR POINT
            F    FOR FLARE
            A    FOR AREA
            V    FOR VOLUME
  ALSO ENTER ANY OF THE FOLLOWING OPTIONS ON THE SAME LINE:

   N    - TO USE THE NON-REGULATORY BUT CONSERVATIVE BRODE 2
          MIXING HEIGHT OPTION,
   nn.n - TO USE AN ANEMOMETER HEIGHT OTHER THAN THE REGULATORY
          (DEFAULT) 10 METER HEIGHT.
   SS   - TO USE A NON-REGULATORY CAVITY CALCULATION ALTERNATIVE
  Example - PN 7.0 SS (entry for a point source)

  ENTER SOURCE TYPE AND ANY OF THE ABOVE OPTIONS:
P
ENTER EMISSION RATE (G/S):
0.126
ENTER STACK HEIGHT (M):
4.6
ENTER STACK INSIDE DIAMETER (M):
0.46
ENTER STACK GAS EXIT VELOCITY OR FLOW RATE:
OPTION 1 : EXIT VELOCITY (M/S):
 DEFAULT - ENTER NUMBER ONLY
OPTION 2 : VOLUME FLOW RATE (M**3/S):
       EXAMPLE "VM=20.00"
OPTION 3 : VOLUME FLOW RATE (ACFM):
       EXAMPLE "VF=1000.00"
0.9
ENTER STACK GAS EXIT TEMPERATURE (K):
478
ENTER AMBIENT AIR TEMPERATURE (USE 293 FOR DEFAULT) (K):
280
ENTER RECEPTOR HEIGHT ABOVE GROUND (FOR FLAGPOLE RECEPTOR) (M):
0
ENTER URBAN/RURAL OPTION (U=URBAN, R=RURAL):
R
CONSIDER BUILDING DOWNWASH IN CALCS?  ENTER Y OR N:
N
USE COMPLEX TERRAIN SCREEN FOR TERRAIN ABOVE STACK HEIGHT?
ENTER Y OR N:
Y
```

```
FINAL STABLE PLUME HEIGHT (M) =  13.9
DISTANCE TO FINAL RISE (M)   =  147.9

MAXIMUM CONCENTRATIONS ARE EXPECTED TO OCCUR DUE TO PLUME IMPACTION.
THEREFORE ENTER MINIMUM DISTANCES AND TERRAIN HEIGHTS FOR WHICH
IMPACTION IS LIKELY, TAKING INTO ACCOUNT TERRAIN CLOSER THAN
THE DISTANCE TO FINAL RISE.
FOR TERRAIN BELOW PLUME HEIGHT, SIMPLE TERRAIN AND VALLEY 24-HR
CALCULATIONS ARE BOTH MADE AND THE MAXIMUM SELECTED.

ENTER TERRAIN HEIGHT ABOVE STACK BASE (M),
AND DISTANCE TO TERRAIN (M) (ZEROES TO EXIT):
6,95
                *VALLEY 24-HR CALCS*   **SIMPLE TERRAIN 24-HR CALCS**
 TERR      MAX 24-HR          PLUME HT          PLUME HT
  HT   DIST   CONC      CONC   ABOVE STK   CONC   ABOVE STK   U10M USTK
 (M)   (M)  (UG/M**3)  (UG/M**3)  BASE (M)  (UG/M**3)  HGT (M)  SC   (M/S)
----- ------- ---------- ---------- ------  ---------- ------ -- ---- ----
  6.   95. 225.8     .5290      11.3   225.8       3.3  4  1.5  1.5

ENTER TERRAIN HEIGHT ABOVE STACK BASE (M),
AND DISTANCE TO TERRAIN (M) (ZEROES TO EXIT):
9,153
  9.  153. 134.2     2.939      13.9   134.2       5.7  4  1.0  1.0

ENTER TERRAIN HEIGHT ABOVE STACK BASE (M),
AND DISTANCE TO TERRAIN (M) (ZEROES TO EXIT):
12,180
 12.  180. 109.6     3.337      13.9   109.6       5.7  4  1.0  1.0

ENTER TERRAIN HEIGHT ABOVE STACK BASE (M),
AND DISTANCE TO TERRAIN (M) (ZEROES TO EXIT):
15,246
 15.  246. 3.847     3.847      13.9   .0000       .0  0  .0  .0

ENTER TERRAIN HEIGHT ABOVE STACK BASE (M),
AND DISTANCE TO TERRAIN (M) (ZEROES TO EXIT):
18,279
 18.  279. 3.904     3.904      13.9   .0000       .0  0  .0  .0

ENTER TERRAIN HEIGHT ABOVE STACK BASE (M),
AND DISTANCE TO TERRAIN (M) (ZEROES TO EXIT):
20,312
                *VALLEY 24-HR CALCS*   **SIMPLE TERRAIN 24-HR CALCS**
 TERR      MAX 24-HR          PLUME HT          PLUME HT
  HT   DIST   CONC      CONC   ABOVE STK   CONC   ABOVE STK   U10M USTK
 (M)   (M)  (UG/M**3)  (UG/M**3)  BASE (M)  (UG/M**3)  HGT (M)  SC   (M/S)
```

```
----- ------- ---------- ---------- ------ ---------- ------ -- ---- ----
 20.   312. 3.875     3.875      13.9   .0000        .0  0  .0  .0

ENTER TERRAIN HEIGHT ABOVE STACK BASE (M),
AND DISTANCE TO TERRAIN (M) (ZEROES TO EXIT):
0,0

COMPLEX TERRAIN CALCULATIONS DONE.
CONTINUE WITH SIMPLE TERRAIN CALCULATIONS?  ENTER Y OR N:
Y
USE SIMPLE TERRAIN SCREEN WITH TERRAIN ABOVE STACK BASE?
ENTER Y OR N:
Y
ENTER CHOICE OF METEOROLOGY;
1 - FULL METEOROLOGY (ALL STABILITIES & WIND SPEEDS)
2 - INPUT SINGLE STABILITY CLASS
3 - INPUT SINGLE STABILITY CLASS AND WIND SPEED
1
USE AUTOMATED DISTANCE ARRAY? ENTER Y OR N:
Y
ENTER TERRAIN HEIGHT ABOVE STACK BASE (M):
1.5
ENTER MIN AND MAX DISTANCES TO USE (M):
34 55

**********************************
*** SCREEN AUTOMATED DISTANCES ***
**********************************

*** TERRAIN HEIGHT OF    2. M ABOVE STACK BASE USED FOR FOLLOWING DISTANCES ***

 DIST    CONC          U10M   USTK  MIX HT   PLUME   SIGMA   SIGMA
  (M)  (UG/M**3)  STAB  (M/S)  (M/S)    (M)   HT (M)   Y (M)   Z (M)  DWASH
------- ---------- ---- ----- ----- ------ ------ ------ ------ -----
   34.  365.3      3    3.5   3.5  1120.0   3.74   4.61   2.82   NO
ITERATING TO FIND MAXIMUM CONCENTRATION . . .

MAXIMUM 1-HR CONCENTRATION AT OR BEYOND    34. M:
   34.  365.3      3    3.5   3.5  1120.0   3.74   4.61   2.82   NO

CONTINUE SIMPLE TERRAIN AUTOMATED CALCS WITH NEW TERRAIN HEIGHT?
ENTER Y OR N:
Y
ENTER TERRAIN HEIGHT ABOVE STACK BASE (M):
3
ENTER MIN AND MAX DISTANCES TO USE (M):
55 95
```

```
**********************************
*** SCREEN AUTOMATED DISTANCES ***
**********************************

*** TERRAIN HEIGHT OF   3. M ABOVE STACK BASE USED FOR FOLLOWING DISTANCES ***

 DIST    CONC          U10M   USTK  MIX HT   PLUME   SIGMA   SIGMA
  (M)  (UG/M**3)  STAB  (M/S)  (M/S)   (M)   HT (M)   Y (M)   Z (M)  DWASH
------- ---------- ---- ----- ----- ------ ------ ------ ------ -----
  55.  666.6      4    2.5   2.5  800.0   3.05   4.76   2.86   NO
ITERATING TO FIND MAXIMUM CONCENTRATION . . .

MAXIMUM 1-HR CONCENTRATION AT OR BEYOND   55. M:
  55.  666.6      4    2.5   2.5  800.0   3.05   4.76   2.86   NO

CONTINUE SIMPLE TERRAIN AUTOMATED CALCS WITH NEW TERRAIN HEIGHT?
ENTER Y OR N:
N


USE DISCRETE DISTANCES?  ENTER Y OR N:
N

   ***************************************
   *** SUMMARY OF SCREEN MODEL RESULTS ***
   ***************************************

 CALCULATION       MAX CONC   DIST TO   TERRAIN
  PROCEDURE       (UG/M**3)   MAX (M)   HT (M)
-------------  -----------  -------  -------
SIMPLE TERRAIN     666.6        55.      3.

COMPLEX TERRAIN    225.8        95.      6. (24-HR CONC)


****************************************************
** REMEMBER TO INCLUDE BACKGROUND CONCENTRATIONS **
****************************************************

DO YOU WANT TO PRINT A HARDCOPY OF THE RESULTS?  ENTER Y OR N:
```

```
****** SCREEN3 MODEL ******
**** VERSION DATED 96043 ****

ENTER TITLE FOR THIS RUN (UP TO 79 CHARACTERS):
Jicarilla Compressor Station FLARE-1

ENTER SOURCE TYPE: P    FOR POINT
           F    FOR FLARE
           A    FOR AREA
           V    FOR VOLUME
  ALSO ENTER ANY OF THE FOLLOWING OPTIONS ON THE SAME LINE:

   N   - TO USE THE NON-REGULATORY BUT CONSERVATIVE BRODE 2
         MIXING HEIGHT OPTION,
   nn.n - TO USE AN ANEMOMETER HEIGHT OTHER THAN THE REGULATORY
         (DEFAULT) 10 METER HEIGHT.
   SS   - TO USE A NON-REGULATORY CAVITY CALCULATION ALTERNATIVE
  Example - PN 7.0 SS (entry for a point source)

  ENTER SOURCE TYPE AND ANY OF THE ABOVE OPTIONS:
f
ENTER EMISSION RATE (G/S):
0.126
ENTER FLARE STACK HEIGHT (M):
9.1
ENTER TOTAL HEAT RELEASE RATE (CAL/S):
34457
ENTER RECEPTOR HEIGHT ABOVE GROUND (FOR FLAGPOLE RECEPTOR) (M):
0
ENTER URBAN/RURAL OPTION (U=URBAN, R=RURAL):
r
EFFECTIVE RELEASE HEIGHT =      9.772641
CONSIDER BUILDING DOWNWASH IN CALCS?  ENTER Y OR N:
n
USE COMPLEX TERRAIN SCREEN FOR TERRAIN ABOVE STACK HEIGHT?
ENTER Y OR N:
y

FINAL STABLE PLUME HEIGHT (M) =  24.9
DISTANCE TO FINAL RISE (M)   =  151.3

MAXIMUM CONCENTRATIONS ARE EXPECTED TO OCCUR DUE TO PLUME IMPACTION.
THEREFORE ENTER MINIMUM DISTANCES AND TERRAIN HEIGHTS FOR WHICH
IMPACTION IS LIKELY, TAKING INTO ACCOUNT TERRAIN CLOSER THAN
THE DISTANCE TO FINAL RISE.
FOR TERRAIN BELOW PLUME HEIGHT, SIMPLE TERRAIN AND VALLEY 24-HR
CALCULATIONS ARE BOTH MADE AND THE MAXIMUM SELECTED.
```

```
ENTER TERRAIN HEIGHT ABOVE STACK BASE (M),
AND DISTANCE TO TERRAIN (M) (ZEROES TO EXIT):
9,153
 TERRAIN HEIGHT IS NOT ABOVE STACK HEIGHT.

ENTER TERRAIN HEIGHT ABOVE STACK BASE (M),
AND DISTANCE TO TERRAIN (M) (ZEROES TO EXIT):
12,180
                *VALLEY 24-HR CALCS*   **SIMPLE TERRAIN 24-HR CALCS**
 TERR       MAX 24-HR           PLUME HT           PLUME HT
  HT   DIST   CONC       CONC   ABOVE STK   CONC   ABOVE STK   U10M USTK
 (M)   (M)  (UG/M**3)  (UG/M**3)  BASE (M)  (UG/M**3)  HGT (M)  SC   (M/S)
----- ------- ---------- ---------- ------  ---------- ------  -- ---- ----
  12.   180. 47.71     1.986      24.9   47.71      7.0  4  2.0  2.0

ENTER TERRAIN HEIGHT ABOVE STACK BASE (M),
AND DISTANCE TO TERRAIN (M) (ZEROES TO EXIT):
15,246
  15.   246. 35.89     4.862      24.9   35.89      9.4  4  1.5  1.5

ENTER TERRAIN HEIGHT ABOVE STACK BASE (M),
AND DISTANCE TO TERRAIN (M) (ZEROES TO EXIT):
18,279
  18.   279. 31.24     4.609      24.9   31.24     14.1  4  1.0  1.0

ENTER TERRAIN HEIGHT ABOVE STACK BASE (M),
AND DISTANCE TO TERRAIN (M) (ZEROES TO EXIT):
20,312
  20.   312. 28.91     4.359      24.9   28.91     14.1  4  1.0  1.0

ENTER TERRAIN HEIGHT ABOVE STACK BASE (M),
AND DISTANCE TO TERRAIN (M) (ZEROES TO EXIT):
0,0

COMPLEX TERRAIN CALCULATIONS DONE.
CONTINUE WITH SIMPLE TERRAIN CALCULATIONS?  ENTER Y OR N:
y
USE SIMPLE TERRAIN SCREEN WITH TERRAIN ABOVE STACK BASE?
ENTER Y OR N:
y
ENTER CHOICE OF METEOROLOGY;
1 - FULL METEOROLOGY (ALL STABILITIES & WIND SPEEDS)
2 - INPUT SINGLE STABILITY CLASS
3 - INPUT SINGLE STABILITY CLASS AND WIND SPEED
1
USE AUTOMATED DISTANCE ARRAY? ENTER Y OR N:
y
ENTER TERRAIN HEIGHT ABOVE STACK BASE (M):
```

```
1.5
ENTER MIN AND MAX DISTANCES TO USE (M):
34,55

**********************************
*** SCREEN AUTOMATED DISTANCES ***
**********************************

*** TERRAIN HEIGHT OF   2. M ABOVE STACK BASE USED FOR FOLLOWING DISTANCES ***

 DIST   CONC        U10M  USTK  MIX HT  PLUME  SIGMA  SIGMA
  (M)  (UG/M**3)  STAB  (M/S)  (M/S)   (M)  HT (M)  Y (M)  Z (M)  DWASH
------- ---------- ---- ----- ----- ------ ------ ------ ------ -----
  34.  11.27     1   3.0   3.0  960.0  12.97  10.25   5.21   NO
ITERATING TO FIND MAXIMUM CONCENTRATION . . .

MAXIMUM 1-HR CONCENTRATION AT OR BEYOND   34. M:
  76.  32.67     1   2.0   2.0  640.0  15.31  21.33  11.08   NO

CONTINUE SIMPLE TERRAIN AUTOMATED CALCS WITH NEW TERRAIN HEIGHT?
ENTER Y OR N:
y
ENTER TERRAIN HEIGHT ABOVE STACK BASE (M):
3
ENTER MIN AND MAX DISTANCES TO USE (M):
55,95

**********************************
*** SCREEN AUTOMATED DISTANCES ***
**********************************

*** TERRAIN HEIGHT OF   3. M ABOVE STACK BASE USED FOR FOLLOWING DISTANCES ***

 DIST   CONC        U10M  USTK  MIX HT  PLUME  SIGMA  SIGMA
  (M)  (UG/M**3)  STAB  (M/S)  (M/S)   (M)  HT (M)  Y (M)  Z (M)  DWASH
------- ---------- ---- ----- ----- ------ ------ ------ ------ -----
  55.  38.82     1   2.5   2.5  800.0  12.40  15.77   8.09   NO
ITERATING TO FIND MAXIMUM CONCENTRATION . . .

MAXIMUM 1-HR CONCENTRATION AT OR BEYOND   55. M:
  81.  42.54     2   2.0   2.0  640.0  13.81  16.12   8.99   NO

CONTINUE SIMPLE TERRAIN AUTOMATED CALCS WITH NEW TERRAIN HEIGHT?
ENTER Y OR N:
y
ENTER TERRAIN HEIGHT ABOVE STACK BASE (M):
6
ENTER MIN AND MAX DISTANCES TO USE (M):
```

```
95,153

**********************************
*** SCREEN AUTOMATED DISTANCES ***
**********************************

*** TERRAIN HEIGHT OF   6. M ABOVE STACK BASE USED FOR FOLLOWING DISTANCES ***

 DIST   CONC        U10M  USTK MIX HT  PLUME  SIGMA  SIGMA
 (M)  (UG/M**3)  STAB (M/S) (M/S)  (M)  HT (M)  Y (M)  Z (M) DWASH
------- ---------- ---- ----- ----- ------ ------ ------ ------ -----
  95.  79.77     3   2.5   2.5  800.0   9.40  11.99   7.28   NO
 100.  78.90     4   4.5   4.5 1440.0   6.90   8.25   4.74   NO
ITERATING TO FIND MAXIMUM CONCENTRATION . . .

MAXIMUM 1-HR CONCENTRATION AT OR BEYOND   95. M:
  95.  79.77     3   2.5   2.5  800.0   9.40  11.99   7.28   NO

CONTINUE SIMPLE TERRAIN AUTOMATED CALCS WITH NEW TERRAIN HEIGHT?
ENTER Y OR N:
y
ENTER TERRAIN HEIGHT ABOVE STACK BASE (M):
9
ENTER MIN AND MAX DISTANCES TO USE (M):
153,180

**********************************
*** SCREEN AUTOMATED DISTANCES ***
**********************************

*** TERRAIN HEIGHT OF   9. M ABOVE STACK BASE USED FOR FOLLOWING DISTANCES ***

 DIST   CONC        U10M  USTK MIX HT  PLUME  SIGMA  SIGMA
 (M)  (UG/M**3)  STAB (M/S) (M/S)  (M)  HT (M)  Y (M)  Z (M) DWASH
------- ---------- ---- ----- ----- ------ ------ ------ ------ -----
 153.  124.9     4   2.0   2.0  640.0   7.81  12.32   7.03   NO
ITERATING TO FIND MAXIMUM CONCENTRATION . . .

MAXIMUM 1-HR CONCENTRATION AT OR BEYOND  153. M:
 153.  124.9     4   2.0   2.0  640.0   7.81  12.32   7.03   NO

CONTINUE SIMPLE TERRAIN AUTOMATED CALCS WITH NEW TERRAIN HEIGHT?
ENTER Y OR N:
n


USE DISCRETE DISTANCES?  ENTER Y OR N:
n
```

```
***************************************
*** SUMMARY OF SCREEN MODEL RESULTS ***
***************************************

 CALCULATION      MAX CONC   DIST TO   TERRAIN
  PROCEDURE      (UG/M**3)   MAX (M)   HT (M)
--------------  -----------  -------  -------
SIMPLE TERRAIN     124.9       153.      9.

COMPLEX TERRAIN    47.71       180.     12. (24-HR CONC)


***************************************************
** REMEMBER TO INCLUDE BACKGROUND CONCENTRATIONS **
***************************************************
```

ATTACHMENT 6

THE ENDANGERED SPECIES ACT AND THE NATIONAL HISTORIC PRESERVATION ACT REVIEWS

SYNTHETIC MINOR LIMIT APPLICATION

JICARILLA COMPRESSOR STATION

XTO ENERGY, INC.

XTO Energy, Inc.
Jicarilla Compressor Station
36.43905, -107.34797 (Rio Arriba County, NM)
Endangered Species / NHPA Desktop Review

Endangered Species:

Listed threatened or endangered species for Rio Arriba County per USFWS website (http://www.fws.gov/endangered/):

Jemez Mountains salamander (*Plethodon neomexicanus*)
Yellow-billed cuckoo (*Coccyzus americanis*)
Mexican spotted owl (*Strix occidentalis lucida*)
Least tern (*Sterna antillarum*)
Southwestern willow flycatcher (*Epidonax trailii extimus*)
Rio Grande cutthroat trout (*Oncorhynchus clarki virginalis*)
Canada lynx (*Lynx canadensis*)
New Mexico meadow jumping mouse (*Zapus hudsonius luteus*)

The Jemez Mountains salamander is found almost exclusively in moist micro-climates along streams in the Santa Fe National Forest. The subject property is not located near the SFNF and appears to consist of scrub/shrub high plains. So, the potential presence of the JM salamander in the subject area seems very unlikely.

The Yellow-billed cuckoo is more prevalent in the SE U.S. and prefers relatively dense tree/shrub vegetation associated with riparian zones along streams (more consistent with the elevated SFNF area). So, the potential presence of the YB cuckoo in the subject area seems very unlikely.

The Mexican spotted owl prefers conifer-pine-oak forest/timber of uneven management (logging) and growth cycles and sloping terrain. Again, this habitat is more consistent with the SFNF many miles east of the subject property. So, the potential presence of the MS owl in the subject area seems unlikely.

The Least tern is primarily located along beach and coastal areas. These birds are migratory and have been historically found in Rio Arriba County. However, this species seems to typically stay near surface water, which is not found in the subject area. So, the potential presence of the Least tern in the subject area seems unlikely.

The Southwestern willow flycatcher in New Mexico is primarily found in the riparian zone around the Gila River in the southwestern portion of the state. Occurrences of the SWF have been detected, but again, these birds seem to prefer the dense riparian zone around major streams. So, the potential presence of the SWF in the subject area seems very unlikely.

The Rio Grande cutthroat trout is found almost exclusively in the SFNF and require a significant stream habitat. No such habitat is found anywhere near the subject property. So, the potential presence of the RGCT in the subject area is extremely unlikely if not impossible.

The Canada lynx requires elevated boreal forest habitat and an abundance of snowfall and snowshoe hare presence. Again, this more accurately described the SFNF area and not the scrub/shrub plains of the subject area. So, the potential presence of the Canada lynx in the subject area seems very unlikely.

The New Mexico meadow jumping mouse has been found in the Jemez Mountains in the upper Guadalupe River drainage. The NMMJM also prefers dense grassy vegetation promoting soil moisture. The subject property is not near this habitat zone. So, the potential presence of the NMMJM in the subject area seems unlikely.

This information does not constitute a comprehensive endangered species impact study and is only based on referenced data.

National Historic Preservation Act review:

Review of minimal historical aerial photographs dated to the later 1990s suggests that the subject property has been developed with an oil/gas production pad. In general the subject area consists of undeveloped high plains scrub/shrub landscape with scattered oil/gas well pad sites throughout the area, so the subject property development is consistent with other limited development in the area. Based on the remote nature and harsh environment of the subject area, the presence of historic and/or culturally significant elements seems unlikely. However, the subject property is located within the extent of the Jicarilla Apache Reservation. Furthermore, the subject area is also located within the known historical extent/range of the Navajo people.

The fact that the subject property is already developed, and similar oil/gas developments are common in the subject area, suggests that such development activities have been condoned by relevant governing bodies. However, locating such documentation of site clearance authorized by the Jicarilla Apache Nation and/or the New Mexico Historic Preservation Division (NMHPD) would seem prudent. The Jicarilla Apache Nation appears to have an active Environmental Protection Department and a diverse Cultural Affairs group. In fact, the Jicarilla Apache Nation Environmental Protection Department has been actively pursuing remediation of unlined oil/gas well pits and associated conditions. If future development of the subject property is planned, consultation with the relevant groups with the Jicarilla Apache Nation, the Navajo Nation, and the NMHPD would be prudent and probably required.

ATTACHMENT 7

SUPPORTING DOCUMENTATION

SYNTHETIC MINOR LIMIT APPLICATION

JICARILLA COMPRESSOR STATION

XTO ENERGY, INC.

XTO Energy, Inc.
Jicarilla Compressor Station
Application for Synthetic Minor Limit
Site Data

	Stream 1		Stream 2		Stream 3	
	Inlet Gas		Condensate		Condensate Vapors	
Component	mole %	wgt. %	mole %	wgt. %	mole %	wgt. %
Nitrogen	0.4798%	0.6453%	0.0630%	0.0193%	1.2000%	0.7690%
Carbon Dioxide	0.6971%	1.4729%	0.0190%	0.0092%	0.4140%	0.4168%
Oxygen	0.0000%	0.0000%	0.0000%	0.0000%	0.0000%	0.0000%
Hydrogen Sulfide	0.0000%	0.0000%	0.0000%	0.0000%	0.0000%	0.0000%
Methane	80.6887%	62.1467%	0.8710%	0.1532%	22.0370%	8.0873%
Ethane	10.0047%	14.4430%	0.9840%	0.3243%	15.1840%	10.4445%
Propane	4.6485%	9.8410%	2.4100%	1.1648%	14.2470%	14.3714%
I-Butane	0.8098%	2.2597%	13.1690%	8.3892%	33.1500%	44.0757%
N-Butane	1.2127%	3.3839%	3.8990%	2.4838%	6.8270%	9.0771%
I-Pentane	0.4057%	1.4053%	3.5790%	2.8302%	2.3810%	3.9297%
N-Pentane	0.3055%	1.0582%	4.1330%	3.2683%	2.1100%	3.4825%
Cyclopentane	0.0204%	0.0707%	0.0000%	0.0000%	0.0000%	0.0000%
n-Hexane	0.1009%	0.4174%	4.5610%	4.3077%	0.9070%	1.7879%
Cyclohexane	0.0504%	0.2085%	0.0000%	0.0000%	0.0000%	0.0000%
other Hexane	0.2258%	0.9341%	4.8140%	4.5466%	0.0000%	0.0000%
Heptanes	0.2031%	0.9770%	28.8200%	31.6499%	0.9170%	2.1018%
Octanes	0.0852%	0.4672%	13.7700%	17.2389%	0.2950%	0.7708%
Nonanes Plus	0.0000%	0.0000%	10.6000%	14.8999%	0.0290%	0.0851%
Benzene	0.0184%	0.0689%	0.8620%	0.7369%	0.1170%	0.2088%
Toluene	0.0303%	0.1340%	4.4690%	4.5126%	0.1570%	0.3309%
Ethylbenzene	0.0014%	0.0071%	0.3560%	0.4142%	0.0040%	0.0097%
Xylenes	0.0116%	0.0591%	2.6220%	3.0509%	0.0210%	0.0510%
Totals	100.00%	100.00%	100.00%	100.00%	100.00%	100.00%
Totals (C3+)		21.29%		99.49%		
Max Totals (C3+)		25.00%		100.00%		
Max Carbon Dioxide		5.00%				
Max Methane		65.00%				
Max. Benzene		0.10%				
Specific Gravity	0.7191					

Fuel Gas Higher Heating Value	1,250 Btu/scf
Fuel Gas Lower Heating Value	1,228 Btu/scf

SPL, Inc.
2440 Chambers Street
Suite A
Venus, TX 76084
817-539-2168 (O)
817-539-2170 (F)

2011120051-001A

Division	Barnett Gathering	**For:**	Clare Hoang
Well:	Jicarilla Compressor Inlet		Barnett Gathering
County	XTO Energy - Jicarilla		810 Houston Street
Sample of:	Liquid		Fort Worth, Texas 76102
Conditions:	19 psi @ 50 °F		
Sampled by:	J.Petree	**Report Date:**	12/17/2011
Sample date:	12/01/2011	**API #:**	
Remarks:	Cylinder No.: 01220	**Tag #:**	Sample time 11:28AM, D

Analysis: (*GPA 2103M*)	**Mol. %**	**MW**	**Wt. %**	**Sp. Gravity**	**L.V. %**
Nitrogen	0.063	28.013	0.019	0.8094	0.017
Methane	0.871	16.043	0.152	0.3000	0.361
Carbon Dioxide	0.019	44.010	0.009	0.8180	0.008
Ethane	0.984	30.070	0.323	0.3562	0.643
Propane	2.410	44.097	1.160	0.5070	1.623
Iso-butane	13.169	58.123	8.353	0.5629	10.535
N-butane	3.899	58.123	2.473	0.5840	3.006
Iso-pentane	3.579	72.150	2.818	0.6244	3.203
N-pentane	4.133	72.150	3.254	0.6311	3.661
i-Hexanes	2.176	86.177	1.992	0.6795	2.088
n-Hexane	4.561	85.438	4.289	0.6640	4.584
2,2,4 trimethylpentane	0.106	114.231	0.132	0.6967	0.135
Methylcyclopentane	2.638	84.161	3.050	0.7535	2.638
Benzene	0.862	78.114	0.833	0.8846	0.589
Heptanes	19.419	94.300	19.680	0.7231	19.903
Methylcyclohexane	9.401	98.188	9.401	0.7740	8.623
Toluene	4.469	92.141	6.405	0.8719	3.659
Octanes	13.667	104.865	15.709	0.7603	17.144
E-benzene	0.356	106.167	0.412	0.8718	0.336
M-,O-,P-xylene	2.622	106.167	3.038	0.8731	2.484
Nonanes	6.166	116.971	8.222	0.7859	7.725
Decanes Plus	4.430	171.185	8.276	0.8353	7.035
	---		---		---
	100.000		100.000		100.000

Calculated Values	**Total Sample**	**Decanes Plus**
Specific Gravity at 60 °F	0.7100	0.8353
Api Gravity at 60 °F	67.810	37.910
Molecular Weight	91.634	171.185
Pounds per Gallon (in Vacuum)	5.919	6.964
Pounds per Gallon (in Air)	5.913	6.956
Cu. Ft. Vapor per Gallon @ 14.65 psia	24.436	15.486

SPL, Inc.
2440 Chambers Street, Suite A
Venus, TX 76084

CERTIFICATE OF ANALYSIS

Certificate of Analysis: 2011120051-001A

Customer: XTO Energy
Attn: Craig Allison
810 Houston Street
Fort Worth, TX 76102

Report Date: 12/17/11

PO / Ref. No.:

Company: XTO Energy
Field: New Mexico
Well : Jicarilla Compresspr Station
API #:
Sample Point: Inlet Separator

Sample Of: Liquid
Sample Date/Time: 12/1/2011
Sample Psig & Temp: 19 psig @ 50°F
Sampled By: JP-XTO
Cylinder # : 01220

Comments: Staged Flash from 33.7 psi @ 50°F to 0 psi @ 60°F

Analytical Data

Parameters	Results	Units	Method	Lab Tech.	Date Analyzed
Shrinkage Factor	0.9814		Shrink-EOS	DDO	12/17/11
Flash Factor	29.523	Cu.Ft./STBbl.	Shrink-EOS	DDO	12/17/11

Hydrocarbon Laboratory Manager

SPL, Inc.
2440 Chambers Street, Suite A
Venus, TX 76084

CERTIFICATE OF ANALYSIS
Certificate of Analysis: 2011120051-001A

Customer: XTO Energy
Attn: Craig Allison
810 Houston Street
Fort Worth, TX 76102

Report Date: 12/17/11

PO / Ref. No.:

Company: XTO Energy
Field: New Mexico
Well: Jicarilla Compresspr Station
API #
Sample Point: Inlet Separator
Comments: EOS Flash Gas Composition

Sample Of: Liquid
Sample Date/Time: 12/01/11
Sample Psig & Temp: 19 psig @ 50°F
Sampled By: JP-XTO
Cylinder # : 01220

	MOL %	WEIGHT %	GPM
NITROGEN	1.200	0.770	
CO2	0.414	0.417	
METHANE	22.037	8.096	
ETHANE	15.184	10.456	5.708
PROPANE	14.247	14.387	5.199
I-BUTANE	33.150	44.124	10.182
N-BUTANE	6.827	9.087	2.176
I-PENTANE	2.381	3.934	0.654
N-PENTANE	2.110	3.487	0.585
HEXANES	0.907	1.757	0.222
BENZENE	0.117	0.209	0.042
HEPTANES	0.917	2.030	0.200
TOLUENE	0.157	0.332	0.047
OCTANES	0.295	0.758	0.058
E-BENZENE	0.004	0.010	0.001
m,o,&p-XYLENE	0.021	0.052	0.006
NONANES	0.024	0.071	0.004
DECANES PLUS	0.005	0.023	0.001
TOTALS	100.000	100.000	25.084

CALCULATED VALUES

REAL DRY BTU AT 14.73 PSIA, 60 DEG.F	2500.2	
REAL WET BTU AT 14.73 PSIA, 60 DEG.F	2456.7	
RELATIVE DENSITY	1.5354	
COMPRESSIBILITY FACTOR	0.98286	
	C2+	C5+
GPM's @ 14.73 psia, 60 Deg.F	25.084	1.820

CERTIFICATE OF ANALYSIS

Number : **2011120051-002A**

SPL, Inc,
DFW Hydrocarbon Unit
2440 Chambers St. Suite A
Venus, TX 76084
817-539-2168 (O)
817-539-2179 (F)

Barnett Gathering
Clare Hoang
810 Houston Street

Fort Worth, Texas 76102

Station:	Jicarilla Compressor Inlet	**Report Date:**	12/17/11
Field:	XTO Energy - Jicarilla	**Sample Of:**	Spot Liquid
Sample Point:		**Sample Date:**	12/01/2011
Cylinder # :	Tin Can	**Sample Pressure:**	19
		Sample Temperature:	87.2

Comments:

Analytical Data

Test	Method	Results	Units	Lab Tech.	Date Analyzed
Reid Vapor Pressure @ 100 °F	ASTM-D-323	11.60	psi	AO	12/9/2011
API Gravity @ 60 °F	ASTM-D-5002	64.02		AO	12/9/2011

Extended Natural Gas Analysis

Meter Number:	31812	**Flow Pressure:**	42
Meter Name:	Jicarilla Apache CDP 7-6	**Flow Temp:**	71
Location:	XTO	**H20, Lb/MMCF:**	--
Sample Date:	7/6/2011	**H2S, ppmmol:**	--
File name, TCD	Jic Apache 7-6.run	**Type:**	Spot
File name, FID	Jic Apache 7-6.run	**Pulled by:**	Jimmy Petree

Component	Mole%	Weight%	Liquid%
Nitrogen	0.4798	0.6454	0.2776
Oxygen	0.0000	0.0000	0.0000
Methane	80.6885	62.1490	71.9235
Carbon Dioxide	0.6971	1.4730	0.6255
Ethane	10.0047	14.4435	14.0681
Propane	4.6485	9.8414	6.7336
Isobutane	0.8098	2.2599	1.3934
n-Butane	1.2127	3.3840	2.0101
Neopentane	0.0000	0.0000	0.0000
Isopentane	0.4057	1.4055	0.7802
n-Pentane	0.3055	1.0581	0.5822
Hexane+	0.7476	3.3402	1.6059
Total	100.0000	100.0000	100.0000

Avg MW, Total Sample	20.828	
Avg MW, C6+	94.595	
Relative Density	0.7191	
Relative Density, C6+	3.2034	
BTU Dry @ 14.73 psia, 1/Z	1250.1	**Hexanes+** 4985.4
BTU Sat @ 14.73 psia, 1/Z	1228.4	4898.9
C2+ GPM @ 14.73 psia	5.167	
C3+ GPM @ 14.73 psia	2.492	
C5+ GPM @ 14.73 psia	0.564	

Hexanes +

	Mole%	Weight%	Liquid%	ppm
2,2-DMC4	0.0087	0.0358	0.0190	86.5
CYC5	0.0204	0.0689	0.0318	204.5
2,3-DMC4	0.0186	0.0770	0.0401	186.2
2-MC5	0.0906	0.3751	0.1977	906.5
3-MC5	0.0504	0.2084	0.1080	503.7
n-Hexane	0.1009	0.4175	0.2182	1009.0
2,2-DMC5	0.0030	0.0145	0.0074	30.1
MCYC5	0.0575	0.2325	0.1070	575.3
2,4-DMC5	0.0053	0.0254	0.0130	52.7
2,2,3-TMC4	0.0008	0.0039	0.0019	8.0
Benzene	0.0184	0.0692	0.0271	184.3
3,3-DMC5	0.0013	0.0062	0.0031	12.9
CYC6	0.0504	0.2035	0.0901	503.5
2-MC6	0.0223	0.1073	0.0545	223.0
2,3-DMC5	0.0062	0.0296	0.0147	61.5
1,1-DMCYC5	0.0052	0.0244	0.0111	51.7
3MC6 + t-1,3-DMCYC5	0.0212	0.1010	0.0485	212.1
t-1,2-DMCYC5	0.0077	0.0363	0.0166	76.9
3-EtC5	0.0082	0.0395	0.0195	82.1
c-1,3-DMCYC5	0.0105	0.0497	0.0230	105.5
2,2,4-TMC5	0.0000	0.0000	0.0000	0.0
n-Heptane	0.0390	0.1877	0.0946	390.2
1,1,3-TMCYC5	0.0000	0.0000	0.0000	0.0
MCYC6	0.0671	0.3162	0.1417	670.8
2,2-DMC6	0.0000	0.0000	0.0000	0.0
c-1,2-DMCYC5	0.0030	0.0142	0.0063	30.0
2,5-DMC6	0.0019	0.0102	0.0051	18.6
ETCYC5	0.0021	0.0101	0.0045	21.4
2,4-DMC6	0.0023	0.0126	0.0062	23.0
2,2,3-TMC5	0.0000	0.0000	0.0000	0.0
1,t-2,c-4-TMCYC5	0.0000	0.0000	0.0000	0.0
3,3-DMC6	0.0000	0.0000	0.0000	0.0
1,t-2,c-3-TMC5	0.0029	0.0155	0.0071	28.8
2,3,4-TMC5	0.0000	0.0000	0.0000	0.0
2,3-DMC6	0.0018	0.0099	0.0048	18.1
Unknown C8	0.0002	0.0009	0.0005	1.7
Toluene	0.0303	0.1342	0.0534	303.4
2,3,3-TMC5	0.0000	0.0000	0.0000	0.0
1,1,2-TMCYC5	0.0011	0.0058	0.0026	10.8
Unknown C8	0.0000	0.0000	0.0000	0.0
2-MC7	0.0001	0.0008	0.0004	1.4
4-MC7	0.0006	0.0035	0.0017	6.4
3,4-DMC6	0.0083	0.0455	0.0218	83.0
3-EtC6	0.0024	0.0131	0.0064	24.0
3-MC7	0.0005	0.0025	0.0012	4.5
1,c-2,t-4-TMCYC5	0.0062	0.0336	0.0152	62.4
Unknown C8	0.0008	0.0046	0.0023	8.4
c-1,3-DMCYC6	0.0000	0.0000	0.0000	0.0
1,t-4-DMCYC6	0.0084	0.0454	0.0205	84.2
2,2,5-TMC6	0.0034	0.0210	0.0103	34.2
1,1-DMCYC6	0.0000	0.0000	0.0000	0.0
1-M-t-3-EtCYC5	0.0001	0.0006	0.0003	1.2
1-M-t-2-EtCYC5	0.0013	0.0069	0.0031	12.9
1-M-c-3-ECYC6	0.0003	0.0016	0.0007	3.0
1-M-1-EtCYC5	0.0003	0.0015	0.0007	2.8
2,2,4-TMC6	0.0004	0.0026	0.0013	4.2
CYC7	0.0002	0.0009	0.0004	2.0
n-C8 + t-1,2-DMCYC6	0.0153	0.0833	0.0396	152.5
Unknown C8	0.0000	0.0000	0.0000	0.0
t-1,3-DMCYC6	0.0000	0.0000	0.0000	0.0
1,c-4-DMCYC6	0.0003	0.0016	0.0007	2.9

1,c-2,c-3-TMCYC5	0.0000	0.0000	0.0000	0.0
2,4,4-TMC6	0.0017	0.0104	0.0049	16.8
IC3CYC5	0.0000	0.0000	0.0000	0.0
2,3,5-TMC6	0.0000	0.0000	0.0000	0.0
2,2-DMC7	0.0000	0.0000	0.0000	0.0
2,4-DMC7	0.0002	0.0010	0.0005	1.6
2,2,3-TMC6	0.0001	0.0004	0.0002	0.7
2,6-DMC7	0.0004	0.0024	0.0012	3.9
c-1,2-DMCYC6	0.0007	0.0036	0.0016	6.8
4,4-DMC7	0.0000	0.0000	0.0000	0.0
n-C3CYC5	0.0018	0.0098	0.0044	18.2
1,c-3,c-5-TMCYC6	0.0000	0.0000	0.0000	0.0
2,5-DMC7 + 3,5-DMC7	0.0000	0.0000	0.0000	0.0
EtCYC6	0.0000	0.0000	0.0000	0.0
3,3-DMC7	0.0044	0.0270	0.0128	43.8
1,1,3-TMCYC6	0.0000	0.0000	0.0000	0.0
2,3,3-TMC6	0.0011	0.0071	0.0034	11.5
1,1,4-TMCYC6	0.0001	0.0006	0.0002	0.9
EtBenzene	0.0014	0.0073	0.0029	14.3
2,3,4-TMC6	0.0000	0.0000	0.0000	0.0
1,2,4-TMC6	0.0000	0.0000	0.0000	0.0
2,3-DMC7	0.0000	0.0000	0.0000	0.0
1,c-3,t-5-TMCYC6	0.0000	0.0000	0.0000	0.0
3,3,4-TMC6	0.0007	0.0044	0.0020	7.1
3,4-DMC7	0.0006	0.0038	0.0018	6.2
m&p-Xylene	0.0097	0.0496	0.0198	97.4
4-MC8	0.0019	0.0119	0.0057	19.4
3-MC8	0.0000	0.0000	0.0000	0.0
2-MC8	0.0000	0.0000	0.0000	0.0
1,t-2,c-3-TMCYC6	0.0015	0.0089	0.0039	14.6
1,t-2,c-4-TMCYC6	0.0000	0.0000	0.0000	0.0
2,4,6-TMC7	0.0003	0.0018	0.0008	2.6
o-Xylene	0.0019	0.0097	0.0038	19.0
2,2,4-TMC7	0.0000	0.0000	0.0000	0.0
1,1,2-TMCYC6	0.0000	0.0000	0.0000	0.0
2,2,6-TMC7	0.0000	0.0000	0.0000	0.0
1,c-2,t-4-TMCYC6	0.0003	0.0019	0.0008	3.2
2,2,5-TMC7	0.0000	0.0000	0.0000	0.0
1,c-2,c-4-TMCYC6	0.0008	0.0050	0.0022	8.2
2,4,4-TMC7	0.0003	0.0021	0.0010	3.1
n-C9	0.0030	0.0188	0.0090	30.5
2,5,5-TMC7	0.0000	0.0000	0.0000	0.0
1,c-2,t-3-TMCYC6	0.0000	0.0000	0.0000	0.0
1,c-2,c-3-TMCYC6	0.0000	0.0002	0.0001	0.3
IC3Bz	0.0004	0.0023	0.0009	4.0
IC3CYC6	0.0000	0.0000	0.0000	0.0
CYC8	0.0000	0.0000	0.0000	0.0
2,2-DMC8	0.0002	0.0012	0.0006	1.8
c-1,3,5-TMCYC6	0.0005	0.0030	0.0013	5.0
3,3-DMC8	0.0003	0.0018	0.0008	2.6
n-C3CYC6	0.0006	0.0039	0.0017	6.5
NC4CYC5	0.0001	0.0005	0.0002	0.8
n-C3Bz	0.0001	0.0005	0.0002	0.9
3,6-DMC8	0.0000	0.0000	0.0000	0.0
m-EtToluene	0.0000	0.0002	0.0001	0.4
p-EtToluene	0.0000	0.0000	0.0000	0.0
4MC9	0.0005	0.0032	0.0015	4.7
2,3-DMC8	0.0000	0.0000	0.0000	0.0
5MC9	0.0003	0.0024	0.0011	3.5
1,3,5-TMBz	0.0005	0.0030	0.0012	5.1
2MC9	0.0000	0.0000	0.0000	0.0
3MC9	0.0003	0.0020	0.0010	3.0
1M2EtBz	0.0000	0.0000	0.0000	0.0

Ic4CYC6	0.0000	0.0002	0.0001	0.3
tC4Bz + 1,2,4-TMBz	0.0006	0.0036	0.0014	5.8
IC4Bz	0.0007	0.0045	0.0018	7.0
n-C10 + TC4CYC6	0.0000	0.0000	0.0000	0.0
sec-C4Bz	0.0000	0.0003	0.0001	0.4
1,2,3-TMBz	0.0000	0.0001	0.0000	0.1
1M3IC3Bz	0.0003	0.0016	0.0006	2.5
1M4IC3Bz	0.0000	0.0000	0.0000	0.0
1M2IC3Bz	0.0000	0.0000	0.0000	0.0
1M3C3Bz	0.0000	0.0000	0.0000	0.0
n-C4CYC6	0.0002	0.0011	0.0005	1.6
1,3DiEtBz	0.0000	0.0000	0.0000	0.0
1,3DM2EtBz	0.0001	0.0006	0.0002	0.9
n-C4Bz	0.0002	0.0014	0.0006	2.2
1,2DM4EtBz	0.0000	0.0000	0.0000	0.0
1M4C3Bz	0.0000	0.0000	0.0000	0.0
t-1M2(4MC5)CYC5	0.0000	0.0000	0.0000	0.0
1,2DiEtBz	0.0000	0.0000	0.0000	0.0
1,4-DiEtBz	0.0000	0.0000	0.0000	0.0
1,4-DM2EtBz	0.0001	0.0004	0.0002	0.6
1TC4,3,5DMBz	0.0000	0.0000	0.0000	0.0
NC11	0.0000	0.0000	0.0000	0.0
Naphthalene	0.0000	0.0000	0.0000	0.0
1,2,4-TEtBz	0.0000	0.0000	0.0000	0.0
1,3,5-TEtBz	0.0003	0.0020	0.0008	2.5
NC12	0.0000	0.0000	0.0000	0.0
PentylBz	0.0000	0.0000	0.0000	0.0
HexylBz	0.0001	0.0008	0.0003	1.0
	0.7476	3.3402	1.6059	

G3512

GAS COMPRESSION APPLICATION

GAS ENGINE SITE SPECIFIC TECHNICAL DATA
Jicarilla E-1 & E-2 Spec Sheet

CATERPILLAR

ENGINE SPEED (rpm):	1400
COMPRESSION RATIO:	8:1
AFTERCOOLER WATER INLET (°F):	130
JACKET WATER OUTLET (°F):	210
ASPIRATION:	TA
COOLING SYSTEM:	JW+OC, AC
IGNITION SYSTEM:	ADEM3
EXHAUST MANIFOLD:	ASWC
COMBUSTION:	Low Emission
NOx EMISSION LEVEL (g/bhp-hr NOx):	2.0
SET POINT TIMING:	27

FUEL SYSTEM:	HPG IMPCO WITH AIR FUEL RATIO CONTROL
SITE CONDITIONS:	
FUEL:	Field Gas
FUEL PRESSURE RANGE(psig):	35.0-40.0
FUEL METHANE NUMBER:	62.2
FUEL LHV (Btu/scf):	1027
ALTITUDE(ft):	500
MAXIMUM INLET AIR TEMPERATURE(°F):	77
STANDARD RATED POWER:	1004 bhp@1400rpm

RATING		NOTES	LOAD	MAXIMUM RATING 100%	SITE RATING AT MAXIMUM INLET AIR TEMPERATURE 100%	75%	50%
ENGINE POWER	(WITHOUT FAN)	(1)	bhp	1004	1004	753	502
INLET AIR TEMPERATURE			°F	77	77	77	77
ENGINE DATA							
FUEL CONSUMPTION (LHV)		(2)	Btu/bhp-hr	7676	7676	7987	8491
FUEL CONSUMPTION (HHV)		(2)	Btu/bhp-hr	8482	8482	8825	9382
AIR FLOW (77°F, 14.7 psia)	(WET)	(3)(4)	scfm	2181	2181	1665	1152
AIR FLOW	(WET)	(3)(4)	lb/hr	9673	9673	7384	5109
INLET MANIFOLD PRESSURE		(5)	in Hg(abs)	70.1	70.1	55.8	39.9
EXHAUST TEMPERATURE - ENGINE OUTLET		(6)	°F	867	867	869	875
EXHAUST GAS FLOW (@engine outlet temp, 14.5 psia)	(WET)	(7)(4)	ft3/min	5821	5821	4456	3102
EXHAUST GAS MASS FLOW	(WET)	(7)(4)	lb/hr	10044	10044	7673	5314
EMISSIONS DATA - ENGINE OUT							
NOx (as NO2)		(8)(9)	g/bhp-hr	2.00	2.00	2.00	2.00
CO		(8)(9)	g/bhp-hr	2.62	2.62	2.64	2.60
THC (mol. wt. of 15.84)		(8)(9)	g/bhp-hr	2.71	2.71	2.94	3.39
NMHC (mol. wt. of 15.84)		(8)(9)	g/bhp-hr	0.70	0.70	0.76	0.88
NMNEHC (VOCs) (mol. wt. of 15.84)		(8)(9)(10)	g/bhp-hr	0.47	0.47	0.51	0.59
HCHO (Formaldehyde)		(8)(9)	g/bhp-hr	0.24	0.24	0.25	0.27
CO2		(8)(9)	g/bhp-hr	519	519	537	570
EXHAUST OXYGEN		(8)(11)	% DRY	8.0	8.0	7.7	7.4
HEAT REJECTION							
HEAT REJ. TO JACKET WATER (JW)		(12)	Btu/min	31940	31940	27475	22211
HEAT REJ. TO ATMOSPHERE		(12)	Btu/min	4250	4250	3542	2834
HEAT REJ. TO LUBE OIL (OC)		(12)	Btu/min	4763	4763	4098	3312
HEAT REJ. TO AFTERCOOLER (AC)		(12)(13)	Btu/min	8181	8181	4939	1558
COOLING SYSTEM SIZING CRITERIA							
TOTAL JACKET WATER CIRCUIT (JW+OC)		(14)	Btu/min	40850			
TOTAL AFTERCOOLER CIRCUIT (AC)		(13)(14)	Btu/min	8590			
A cooling system safety factor of 0% has been added to the cooling system sizing criteria.							

CONDITIONS AND DEFINITIONS

Engine rating obtained and presented in accordance with ISO 3046/1, adjusted for fuel, site altitude and site inlet air temperature. 100% rating at maximum inlet air temperature is the maximum engine capability for the specified fuel at site altitude and maximum site inlet air temperature. Max. rating is the maximum capability for the specified fuel at site altitude and reduced inlet air temperature. Lowest load point is the lowest continuous duty operating load allowed. No overload permitted at rating shown.

For notes information consult page three.

PREPARED BY: Clare Hoang, XTO Energy Inc.
Data generated by Gas Engine Rating Pro Version 4.01.00
Ref. Data Set DM8617-02-001, Printed 22Dec2011

GAS ENGINE SITE SPECIFIC TECHNICAL DATA
Jicarilla E-1 & E-2 Spec Sheet

Engine Power vs. Inlet Air Temperature

Data represents temperature sweep at 500 ft and 1400 rpm

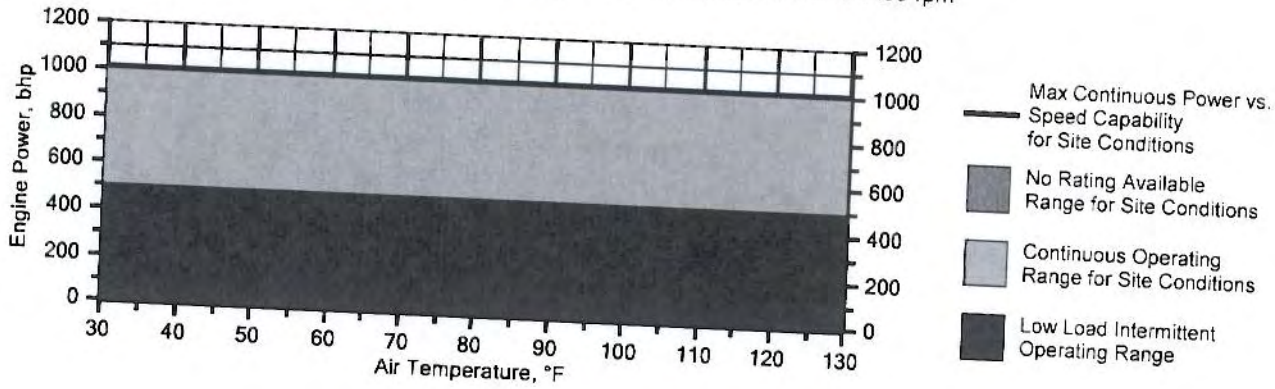

Engine Power vs. Engine Speed

Data represents speed sweep at 500 ft and 77 °F

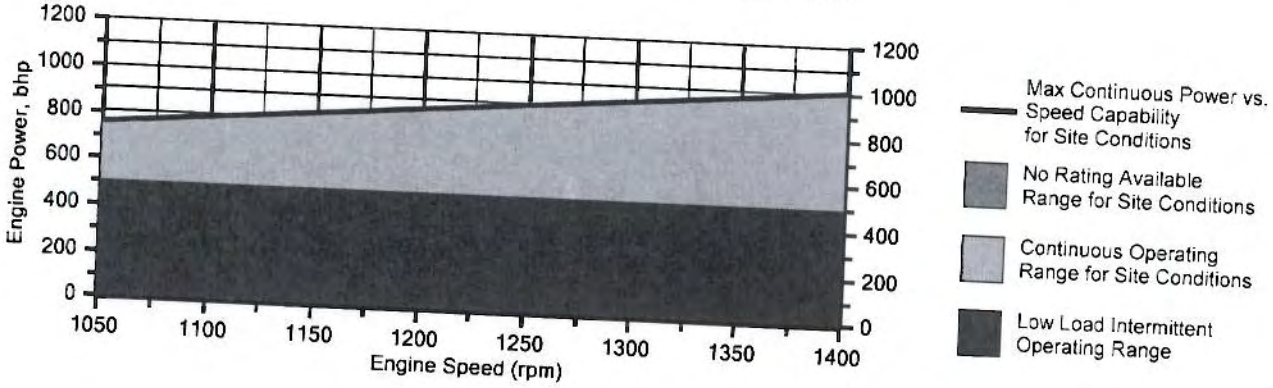

Engine Torque vs. Engine Speed

Data represents speed sweep at 500 ft and 77 °F

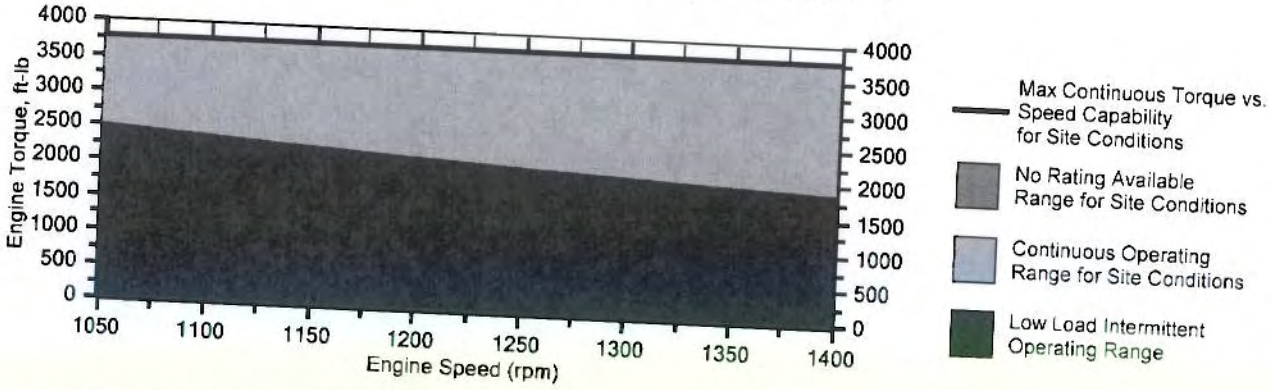

Note: At site conditions of 500 ft and 77°F inlet air temp., constant torque can be maintained down to 1085 rpm. The minimum speed for loading at these conditions is 1050 rpm.

PREPARED BY: Clare Hoang, XTO Energy Inc.
Data generated by Gas Engine Rating Pro Version 4.01.00
Ref. Data Set DM8617-02-001, Printed 22Dec2011

NOTES

1. Engine rating is with two engine driven water pumps. Tolerance is ± 3% of full load.

2. Fuel consumption tolerance is ± 3.0% of full load data.

3. Air flow value is on a 'wet' basis. Flow is a nominal value with a tolerance of ± 5 %.

4. Inlet and Exhaust Restrictions must not exceed A&I limits based on full load flow rates from the standard technical data sheet.

5. Inlet manifold pressure is a nominal value with a tolerance of ± 5 %.

6. Exhaust temperature is a nominal value with a tolerance of (+)63°F, (-)54°F.

7. Exhaust flow value is on a "wet" basis. Flow is a nominal value with a tolerance of ± 6 %.

8. Emissions data is at engine exhaust flange prior to any after treatment.

9. Emission values are based on engine operating at steady state conditions. Fuel methane number cannot vary more than ± 3. Values listed are higher than nominal levels to allow for instrumentation, measurement, and engine-to-engine variations. They indicate "Not to Exceed" values. THC, NMHC, and NMNEHC do not include aldehydes. An oxidation catalyst may be required to meet Federal, State or local CO or HC requirements.

10. VOCs - Volatile organic compounds as defined in US EPA 40 CFR 60, subpart JJJJ

11. Exhaust Oxygen level is the result of adjusting the engine to operate at the specified NOx level. Tolerance is ± 0.5.

12. Heat rejection values are nominal. Tolerances, based on treated water, are ± 10% for jacket water circuit, ± 50% for radiation, ± 20% for lube oil circuit, and ± 5% for aftercooler circuit.

13. Aftercooler heat rejection includes an aftercooler heat rejection factor for the site elevation and inlet air temperature specified. Aftercooler heat rejection values at part load are for reference only. Do not use part load data for heat exchanger sizing.

14. Cooling system sizing criteria are maximum circuit heat rejection for the site, with applied tolerances.

PREPARED BY: Clare Hoang, XTO Energy Inc.
Data generated by Gas Engine Rating Pro Version 4.01.00
Ref. Data Set DM8617-02-001, Printed 22Dec2011

Constituent	Abbrev	Mole %	Norm
Water Vapor	H2O	2.5211	2.5211
Methane	CH4	86.6340	86.6339
Ethane	C2H6	4.9767	4.9767
Propane	C3H8	3.5670	3.5670
Isobutane	iso-C4H1O	0.0000	0.0000
Norbutane	nor-C4H1O	1.8211	1.8211
Isopentane	iso-C5H12	0.0000	0.0000
Norpentane	nor-C5H12	0.4802	0.4802
Hexane	C6H14	0.0000	0.0000
Heptane	C7H16	0.0000	0.0000
Nitrogen	N2	0.0000	0.0000
Carbon Dioxide	CO2	0.0000	0.0000
Hydrogen Sulfide	H2S	0.0000	0.0000
Carbon Monoxide	CO	0.0000	0.0000
Hydrogen	H2	0.0000	0.0000
Oxygen	O2	0.0000	0.0000
Helium	HE	0.0000	0.0000
Neopentane	neo-C5H12	0.0000	0.0000
Octane	C8H18	0.0000	0.0000
Nonane	C9H20	0.0000	0.0000
Ethylene	C2H4	0.0000	0.0000
Propylene	C3H6	0.0000	0.0000
TOTAL (Volume %)		100.0001	100.0000

Fuel Makeup:	Field Gas
Unit of Measure:	English
Calculated Fuel Properties	
Caterpillar Methane Number:	62.2
Lower Heating Value (Btu/scf):	1027
Higher Heating Value (Btu/scf):	1135
WOBBE Index (Btu/scf):	1274
THC: Free Inert Ratio:	Not Applicable
Total % Inerts (% N2, CO2, He):	0%
RPC (%) (To 905 Btu/scf Fuel):	100%
Compressibility Factor:	0.997
Stoich A/F Ratio (Vol/Vol):	10.68
Stoich A/F Ratio (Mass/Mass):	16.43
Specific Gravity (Relative to Air):	0.650
Specific Heat Constant (K):	1.297

CONDITIONS AND DEFINITIONS

Caterpillar Methane Number represents the knock resistance of a gaseous fuel. It should be used with the Caterpillar Fuel Usage Guide for the engine and rating to determine the rating for the fuel specified. A Fuel Usage Guide for each rating is included on page 2 of its standard technical data sheet.

RPC always applies to naturally aspirated (NA) engines, and turbocharged (TA or LE) engines only when they are derated for altitude and ambient site conditions.

Project specific technical data sheets generated by the Caterpillar Gas Engine Rating Pro program take the Caterpillar Methane Number and RPC into account when generating a site rating.

Fuel properties for Btu/scf calculations are at 60F and 14.696 psia.

Caterpillar shall have no liability in law or equity, for damages, consequently or otherwise, arising from use of program and related material or any part thereof.

FUEL LIQUIDS

Field gases, well head gases, and associated gases typically contain liquid water and heavy hydrocarbons entrained in the gas. To prevent detonation and severe damage to the engine, hydrocarbon liquids must not be allowed to enter the engine fuel system. To remove liquids, a liquid separator and coalescing filter are recommended, with an automatic drain and collection tank to prevent contamination of the ground in accordance with local codes and standards.

To avoid water condensation in the engine or fuel lines, limit the relative humidity of water in the fuel to 80% at the minimum fuel operating temperature.

pesco
process equipment & service company inc

OPERATIONAL GUARANTEE - PESCO FLARE STACK
U.S. PATENT 6485292 (Other Patents Pending)

The PESCO Flare Stack (enclosed flare) is guaranteed to achieve total destruction of 98% or greater of all hydrocarbons present in the overhead stream from the still column of a glycol dehydrator. This assumes that the operating parameters do not exceed those to which the flare stack was initially designed. The PESCO Flare Stack is also guaranteed to meet the environmental requirements as set forth in 40 CFR 60.18.

James Rhodes
Engineering Manager
Process Equipment & Service Co., Inc.

5000 U.S. HIGHWAY 64 • 87401 / P.O. BOX 929 • 87499 • FARMINGTON, NEW MEXICO • PHONE: (505) 327-2222 • FAX: (505) 327-7550

Flare Stack

Flare Stack, 30" O.D. x 30'-0" High Carbon Steel Outer Cylinder, 24" O.D. x 20'-0" High Stainless Steel Inner Cylinder, to include the following:

1 - Steam cup assembly, stainless steel construction
4 - Flame arrestors in combustion chamber
4 - Flame arrestors to cool internal liner
1 - Bird cone installed at top of outer cylinder
1 - Steam line shut-off valve, 3" Kimray Model 312-FMT-DB-PO
1 - ESD switch, to shut supply gas to above steam line shut-off valve
1 - Burner assembly with 2" Eclipse air-gas mixer and burner tip
1 - Pilot light assembly
1 - Pilot guard, Kimray HT-18PG, to shut off steam line shut-off valve in the event of pilot outage
1 - Instrument gas and fuel gas piping and tubing

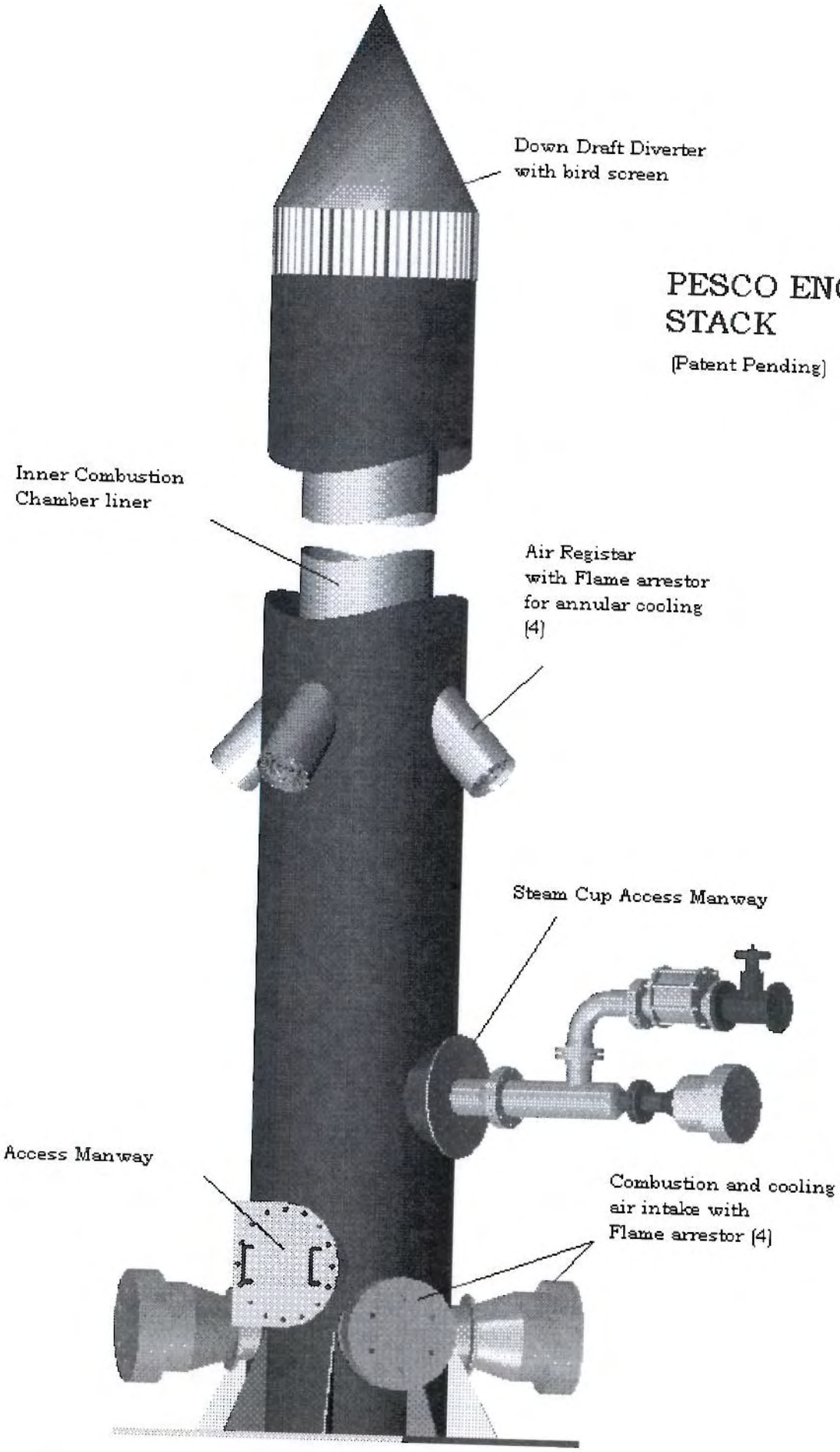
Down Draft Diverter
with bird screen
PESCO ENCLOSE
STACK
(Patent Pending)
Inner Combustion
Chamber liner
Air Registar
with Flame arrestor
for annular cooling
(4)
Steam Cup Access Manway
Access Manway
Combustion and cooling
air intake with
Flame arrestor (4)

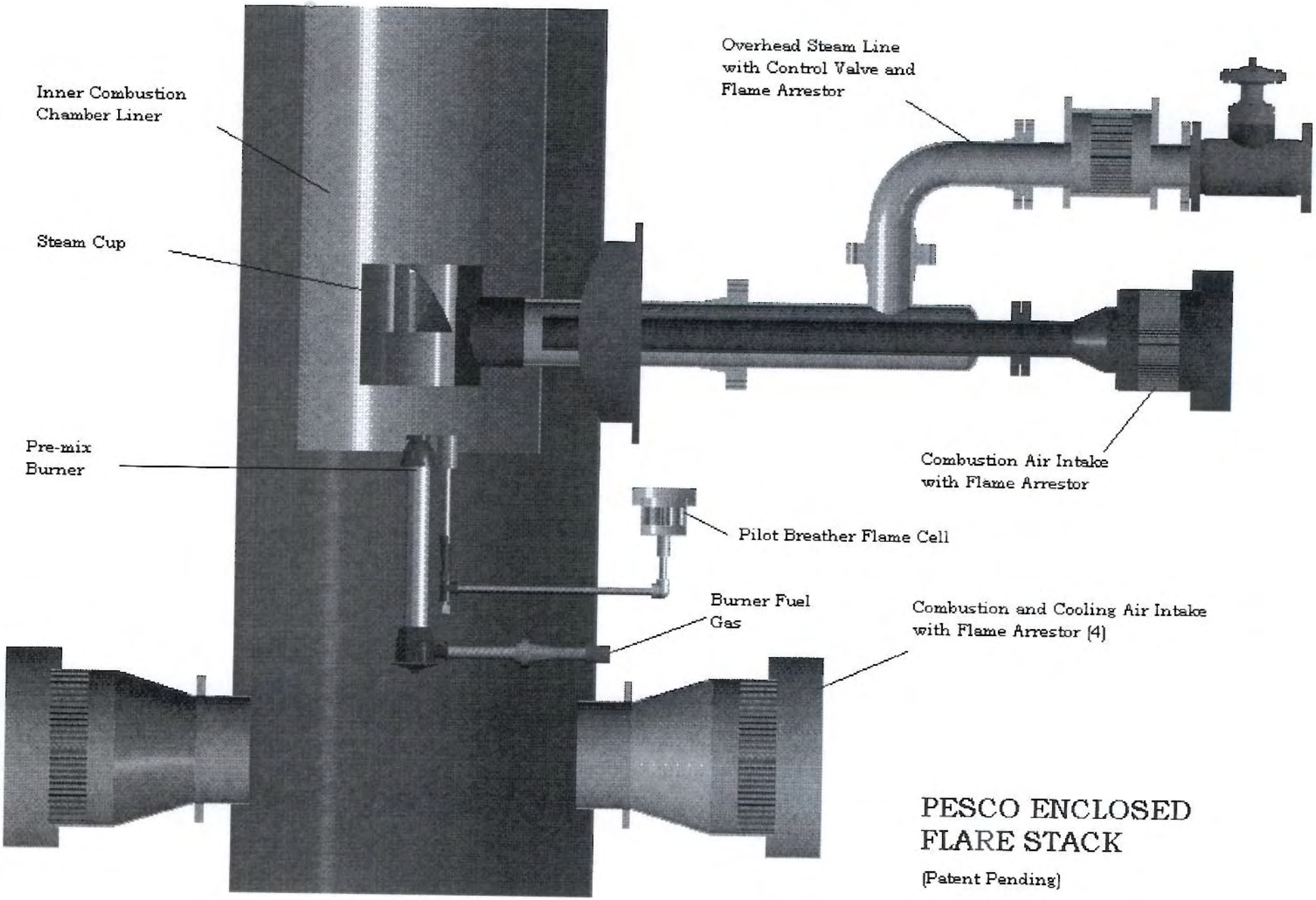

PESCO ENCLOSED FLARE STACK

(Patent Pending)