REPORT

AIR DISPERSION MODELING FOR 1-HOUR AVERAGE SO_2 NAAQS AREA DESIGNATION

BIG ESCAMBIA CREEK PLANT, ESCAMBIA COUNTY, ALABAMA

Submitted To: Air Division
Alabama Department of Environmental Management
P.O. Box 301463
Montgomery, AL 36130-1463

Submitted By: Golder Associates Inc.
6026 NW 1st Place
Gainesville, FL 32607

Distribution: Vanguard – 1 electronic copy
ADEM – 1 electronic copy
Golder – 1 electronic copy

January 2017

16-67189

A world of capabilities delivered locally

Golder Associates

Golder, Golder Associates and the GA globe design are trademarks of Golder Associates Corporation

Table of Contents

1.0 INTRODUCTION 1
2.0 PROJECT DESCRIPTION 2
2.1 Objective 2
2.2 Regulatory Requirement 2
2.3 Emissions 2
2.4 Site Description 3
3.0 AIR QUALITY IMPACT ANALYSIS 4
3.1 Air Modeling Analysis Approach 4
3.2 Air Modeling Analysis Results 8
4.0 CONCLUSION 9

List of Tables

Table 2-1 1-Hour Average SO_2 NAAQS Modeling Emissions Rates Used in Modeling
Table 3-1 Summary of the Stack Parameters Used in Modeling Operation, Big Escambia Creek Facility, Alabama
Table 3-2 Summary of the Stack Exhaust Parameters Used in Modeling Operation, Other Facilities Included in Modeling
Table 3-3 Summary of Seasonal Hour-by-Day SO_2 Concentration
Table 3-4 Modeling Results

List of Figures

Figure 2-1 General Facility Location
Figure 2-2 Site Layout
Figure 3-1 Full Receptor Grid
Figure 3-2 Near-Field Receptor Grid
Figure 3-3 Concentration Plot for 3-Year Average Maximum Daily 1-Hour Average SO_2, Full Receptor Grid
Figure 3-4 Concentration Plot for 3-Year Average Maximum Daily 1-Hour Average SO_2, Near-Field Receptor Grid

List of Appendices

Appendix A Modeling Protocol for SO_2 1-Hour NAAQS
Appendix B Building Downwash Structures
Appendix C Centreville, Alabama, SO_2 Monitoring Values
Appendix D Operating Permits

List of Acronyms

°C	degrees Celsius
°F	degrees Fahrenheit
µg/m^3	micrograms per cubic meter
AERMOD	American Meteorological Society and U.S. Environmental Protection Agency Regulatory Model
BPIP	Building Profile Impact Program
Btu/lb	British thermal unit per pound
Btu/kWh	British thermal unit per kilowatt hour
Btu/scf	British thermal unit per standard cubic foot
CAA	Clean Air Act
CFR	Code of Federal Regulations
CT	combustion turbine
EPA	U.S. Environmental Protection Agency
ft	foot
g/s	grams per second
GEP	Good Engineering Practice
gr/100 scf	grains per 100 standard cubic feet
hr/yr	hours per year
HRSG	heat recovery steam generator
km	kilometer
kW	kilowatt
lb/hr	pound per hour
lb/MMBtu	pound per million British thermal units
lb/MW-hr	pound per megawatt-hour
m	meter
MMBtu/hr	million British thermal units per hour
MMcf/hr	million cubic feet per hour
MW	megawatt
NAAQS	National Ambient Air Quality Standards
NAD83	North American Datum 83
NO_2	nitrogen dioxide
NO_x	nitrogen oxides
NSPS	New Source Performance Standards
NSR	New Source Review
PM	particulate matter
$PM_{2.5}$	particulate matter less than 2.5 microns
PM_{10}	particulate matter less than 10 microns
ppm	parts per million
ppmvd	parts per million by volume dry
PSD	Prevention of Significant Deterioration

SAM	sulfuric acid mist
scf/yr	standard cubic foot per year
SCRAM	Support Center for Regulatory Air Models
SER	significant emissions rate
SIL	significant impact level
SO_2	sulfur dioxide
TPY	tons per year
UTM	Universal Transverse Mercator
VOC	volatile organic compound

1.0 INTRODUCTION

Vanguard Natural Resources, LLC (Vanguard) owns and operates the Big Escambia Creek (BEC) Plant, a natural gas processing and sulfur recovery plant in Escambia County, Alabama, which is currently operating under Facility/Permit No. 502-0007. The U.S. Environmental Protection Agency (EPA) is in the process of completing the 1-hour average sulfur dioxide (SO_2) National Ambient Air Quality Standards (NAAQS) area designation process for the country by Year 2020. The area designation process must be completed using three deadlines – by July 2, 2016 for areas around certain very large SO_2 emissions sources, by December 31, 2017 for areas around certain priority sources [emitted more than 2,000 tons per year (TPY) of SO_2 during the most recent year], and by December 31, 2020 for all remaining areas. The BEC plant has been identified by the Alabama Department of Environmental Management (ADEM) as one of the priority sources and the designation process for the surrounding areas must be completed by December 31, 2017. EPA also finalized the SO_2 Data Requirement Rule (DRR) in August, 2015, which requires characterization of the ambient SO_2 air quality around sources emitting 2,000 TPY or more of SO_2. ADEM is responsible for characterizing the ambient air quality around these sources and completing the designation process in Alabama.

Under the DRR rule, EPA has proposed a hybrid modeling and monitoring approach to characterize the air quality in priority areas and states can decide whether to rely on monitoring alone or modeling alone depending on the area and existing sources. Following consultation with ADEM, Vanguard decided to rely on modeling to characterize the air quality around the BEC plant. The DRR requires that the modeling report must be submitted to EPA by January 13, 2017. Golder Associates Inc. (Golder) was contracted by Vanguard to perform the air dispersion modeling, which was performed according to the draft EPA guidance document "SO_2 NAAQS Designations Modeling Technical Assistance Document" (TAD) (August 2016), final DRR for the 2010 1-Hour Sulfur Dioxide (SO_2) Primary NAAQS dated on August 10, 2015, and email and phone conversations with ADEM.

An air modeling protocol was submitted to ADEM in June 2016, which was also reviewed by EPA. Comments were received from EPA, which were addressed and a revised protocol was submitted to ADEM in December, 2016. A copy of the modeling protocol has been attached in Appendix A. Based on the modeling results, the area around the BEC plant complies with the 1-hour average SO_2 primary NAAQS. This report presents the results of the air dispersion modeling analysis and is organized in the following sections.

- Section 2.0 presents objective of the study, regulatory requirements, and emissions.
- Section 3.0 presents the methodology of the air dispersion modeling and the results.

2.0 PROJECT DESCRIPTION

2.1 Objective

The objective of this air quality modeling analysis is to predict maximum ambient 1-hour average SO_2 air quality concentrations and determine compliance with the 1-hour average SO_2 NAAQS in the area surrounding the BEC plant up to a distance of 15 kilometers (km).

2.2 Regulatory Requirement

On August 10, 2015, the U.S. EPA promulgated the DRR and finalized requirements for the state environmental agencies to monitor or model ambient SO_2 levels in areas with large sources of SO_2 emissions to help implement the 1-hour SO_2 NAAQS. The final rule establishes that, at a minimum, air agencies must characterize air quality around sources that emit 2,000 TPY or more of SO_2. The BEC plant has been identified by ADEM as a source with more than 2,000 TPY of SO_2. Following consultation with ADEM, Vanguard has decided to use modeling to characterize the air quality around the BEC plant. The final DRR also allows the flexibility to characterize air quality using modeling of actual source emissions instead of permit allowable or potential source emissions.

2.3 Emissions

All SO_2 emissions sources at the BEC plant were included in the modeling. Based on the comments received from EPA, SO_2 emissions sources at the Escambia Operating Company facility in Flomaton, Alabama and the Breitburn Operating, L.P. facility located in Jay, Florida were also included in the modeling. Emissions rates for the sources at the BEC are summarized in Tables 2-1. Table 2-1 also presents the emissions rates for SO_2 sources at the Flomaton and Breitburn facilities. Based on the recent conversations with ADEM, actual hourly varying emissions rates for the thermal oxidizer at the BEC plant (source ID S1201) for the period 2013 – 2015 were used in the modeling analysis. Permit allowable or potential emissions rates were used for all other emissions units.

The hourly SO_2 emissions rates of the natural gas-fired engines and boilers at the BEC plant were estimated based on the design heat input or fuel flow rating and a sulfur content of 0.25 grains per 100 standard cubic foot (scf). Emissions rates for the Breitburn facility were initially obtained from the Florida Department of Environmental Protection (FDEP), however permit allowable emissions rates were used for emissions units with available permit allowable rates and for units with available design heat input rate, the SO_2 emissions were estimated based on fuel sulfur content.

For the thermal oxidizer (S1201) at the BEC plant, the hourly varying actual SO_2 emissions rates were obtained from the continuous emissions monitor (CEM) data, which records hourly SO_2 emissions rate and combustion chamber temperature. Emissions data for the periods of CEM malfunctions, plant

downtimes due to equipment malfunction and replacement, power outages, process upset conditions, or scheduled plant shutdowns and startups were excluded from modeling.

2.4 Site Description

The site is about 270 feet above mean sea level (ft-msl). Around the vicinity of the site up to a distance of 15 km, the terrain is gently rolling with elevations changing between approximately 100 ft-msl to approximately 340 ft-msl.

The facility is located approximately 28 km west of Brewton, Escambia County, Alabama, and the location is presented in Figure 2-1. Figure 2-2 shows the layout of Project facilities on the plant site which includes the fenceline and site boundary. The process operations have been occurring on site and within the fenceline of the facility.

3.0 AIR QUALITY IMPACT ANALYSIS

This section addresses the predicted air quality impacts of 1-hour average SO_2 due to the BEC plant sources and other nearby background sources. The general modeling approach is based on the draft EPA guidance document "SO_2 NAAQS Designations Modeling Technical Assistance Document" (TAD) (August 2016) and other latest EPA and ADEM modeling guidelines as appropriate.

The following sections present a summary of the air quality modeling methodology used and the results of the analysis.

3.1 Air Modeling Analysis Approach

The air quality modeling analysis was conducted based on the following general steps:

- Model the 3-year period of 2013-2015.
- Model SO_2 emissions sources from the BEC plant, the Escambia Operating Company facility in Flomaton, Alabama, and the Breitburn Operating, L.P. facility located in Jay, Florida.
- Model hourly varying actual emissions data for the thermal oxidizer (source ID S1201).
- Model seasonally and hour-of-day varying background concentrations from the Centreville monitoring station (SEARCH network).
- Predict 3-year average of 99th percentile of daily maximum 1-hour average concentrations using receptor grid that extends up to 15 km from the BEC plant.
- Compare maximum model predicted concentration including background concentration with the 1-hour average SO_2 NAAQS of 196 µg/m^3.

Model Selection

The selection of air quality models to calculate air quality impacts for the proposed project must be based on the models' ability to simulate impacts in the vicinity of the facility. The American Meteorological Society and EPA Regulatory Model (AERMOD) dispersion model (Version 15181) was used to evaluate the 1-hour average SO_2 concentrations in the area surrounding the BEC plant. AERMOD (Version 15181) is available on the EPA's Internet web site, Support Center for Regulatory Air Models (SCRAM), within the Technology Transfer Network (TTN). The EPA and ADEM recommend that AERMOD be used to predict pollutant concentrations at receptors located within 50 km of a source. AERMOD calculates hourly concentrations based on hourly meteorological data. AERMOD is applicable for the type of project sources and area in which the BEC plant is located since it is recognized as containing the latest scientific algorithms for simulating plume behavior in all types of terrain. EPA requires that AERMOD be used for area designation under the 1-hour average SO_2 NAAQS, unless use of an alternative model can be justified.

The following regulatory default options in AERMOD were used in the rural mode:

1. Final plume rise at all receptor locations
2. Stack tip downwash
3. Buoyancy induced dispersion
4. Default wind speed profile coefficients for rural mode
5. Default vertical potential temperature gradients
6. Calm wind processing

Source Exhaust Parameters

The stack parameters for the emissions units at the BEC plant are presented in Table 3-1. Stack parameters for the Flomaton and Breitburn facility sources are presented in Table 3-2. The flare sources at each facility were modeled as a point source per ADEM guide with the following parameters:

- Stack Height = Flare stack height
- Exit Velocity = 20 meters per second (m/s)
- Exit Temperature= 1273 degrees Kelvin

Building Downwash Effects

Direction-specific building dimensions and the dominant downwash structure parameters used as inputs to the AERMOD dispersion models were determined using the EPA Building Profile Input Program with PRIME enhancement (BPIP-PRIME), version 04274.

Lists of identified structures and tanks that are considered to cause downwash effect are presented in Appendix A and a map with those structures and BEC Surface Ownership Boundary can be found in Appendix B.

Land Use

Land use type around the BEC plant within a 3-km radius was determined using the classification scheme proposed by Auer (1977) and used in the dispersion option. Current aerial imagery was used to determine the amount of rural, industrial, commercial, or compact residential (i.e., residences without individual driveways) land use within the 3-km radius and it was determined that the land use type around the BEC plant is rural. The rural dispersion option was used in AERMOD.

Terrain Consideration

The base elevation of the BEP plant is about 270 feet above mean sea level (ft-msl). The terrain elevation around the facility up to a distance of 15 km changes between 100 ft-amsl to 340 ft-amsl. Since the surrounding terrain ranges up to elevations that are greater than several stacks included in

the modeling analysis, terrain was considered in the modeling analysis. AERMOD's "elevated" terrain option was used in the modeling analysis.

Meteorological Data

A 3-year AERMOD-ready meteorological data set for the period 2013 to 2015 was obtained from ADEM. The 3-year data set is made of hourly surface data is from the National Weather Service (NWS) in Mobile, Alabama, and upper air observations from the NWS station in Slidell, Louisiana. ADEM considers this data set to be representative of the BEC plant site (Vanguard communication with ADEM).

Receptor Locations

Cartesian grid receptors were placed along the ambient air boundary and beyond up to a distance of 15 km. The receptor spacing are as follows:

- Every 50 meters along the ambient boundary
- Every 100 meters outside the ambient boundary out to 2.0 km
- Every 500 meters from 2.0 km to 7.0 km
- Every 1,000 meters from 7.0 km to 15.0 km

Ambient air is defined at 40 CFR 50.1(e) as the portion of the atmosphere where general public has access. The boundary of the property owned by Vanguard has been used as the ambient air boundary.

AERMOD's terrain preprocessing program, AERMAP (Version 11103) was used to process the receptor grid data in all near-field areas, using seamless National Elevation Data (NED) of the greatest horizontal resolution from the USGS. These data was then processed within the model domain based on NAD83. Receptors are shown in Figures 3-1 and 3-2.

Background Concentrations

Background concentrations are necessary to determine total ambient air quality impacts to demonstrate compliance with the NAAQS. "Background concentrations" are defined as concentrations due to sources other than those specifically included in the modeling analysis. For all pollutants, background would include other point sources not included in the modeling, fugitive emission sources, and natural background sources. In general, monitoring data collected near the area in which the air quality impact is performed is used for this purpose.

Per ADEM recommendation, the 1-Hr SO_2 background concentrations are based on a monitor located at Centreville, Alabama, which is a rural air quality monitoring station that is part of the Southeastern Aerosol and Research Characterization (SEARCH) network. Hourly SO_2 monitoring data from

Centreville for the period 2013-2015 were obtained from ADEM, which were used to determine temporally varying background concentrations to be used in the modeling analysis.

The draft EPA SO_2 TAD recommends that the methodology described in EPA's March 1, 2011 memo, "Additional Clarification Regarding Application of Appendix W Modeling Guidance for the 1-hour NO_2 Ambient Air Quality Standard," for calculating temporally varying background monitored concentrations by hour of day and season (excluding periods when the source in question is expected to impact the monitored concentration) is applicable to SO_2 designation modeling. The methodology for SO_2 is to use the 99th percentile concentration for each hour of the day by season and average across 3 years. Recent updates included in AERMOD allow for the inclusion of temporally varying background concentrations in the design value calculation in combination with modeling results. The draft EPA SO_2 TAD also recommends that to calculate the 99th percentile concentration for a season and hour of day combination, the second highest concentration for that combination should be selected. Following the SO_2 TAD recommendations, the seasonally and hour-of-day varying background concentrations from the Centreville monitoring site were determined, which are summarized below in ppb.

Table 3-3. Summary of Seasonal Hour-by-Day SO_2 Concentration (ppb)

	1:00 AM	2:00 AM	3:00 AM	4:00 AM	5:00 AM	6:00 AM	7:00 AM	8:00 AM	9:00 AM	10:00 AM	11:00 AM	12:00 PM
Winter	3.87	3.06	2.61	3.31	5.04	6.71	7.52	6.80	4.10	4.49	5.61	4.39
Spring	2.00	1.89	1.78	1.92	1.87	1.95	2.65	4.60	3.69	3.16	2.27	2.23
Summer	2.53	2.77	2.70	2.01	3.28	5.93	7.67	7.43	3.99	5.17	2.90	3.30
Fall	1.66	2.13	3.63	6.45	8.22	8.32	8.75	8.69	6.22	4.15	4.60	2.34

	1:00 PM	2:00 PM	3:00 PM	4:00 PM	5:00 PM	6:00 PM	7:00 PM	8:00 PM	9:00 PM	10:00 PM	11:00 PM	12:00 AM
Winter	3.93	4.00	3.91	4.06	3.50	4.15	3.45	5.99	2.88	4.23	4.54	3.56
Spring	3.08	3.41	3.16	2.95	2.97	2.33	2.45	2.42	1.58	2.46	2.75	2.40
Summer	3.13	2.81	1.96	1.96	2.90	2.41	2.27	2.38	1.16	1.34	1.20	1.66
Fall	1.92	1.79	2.05	1.34	1.30	1.20	1.04	1.69	1.65	2.09	3.10	1.96

Detailed breakdown of the hourly SO_2 monitored values are presented in Appendix C.

Background Emissions Sources

Based on EPA comments on the draft modeling protocol previously submitted, the following facilities were included as background SO_2 emissions sources:

- Escambia Operating Company facility in Flomaton, Alabama
- Breitburn Operating, L.P. facility located in Jay, Florida

The Flomaton and the Breitburn facilities are located 25 km northeast and 21 km southeast of the BEC plant, respectively. Golder obtained the air operating permit and stack parameters for the Breitburn facility from the Florida Department of Environmental Protection. The operating permit for the Flomaton facility was obtained from the ADEM website. The operating permits are attached in Appendix D.

3.2 Air Modeling Analysis Results

For determining compliance with the NAAQS for 1-hour SO_2, the maximum 3-year average of the 99th (4th highest) percentile of the daily maximum 1-hour average concentrations at each receptor were determined. The air quality modeling analysis was completed and the results are presented in Table 3-4.

Table 3-4. Modeling Results

Max. 3-Year Average 99th Percentile 1-Hour Impact (µg/m³)	Maximum Impact Receptor Location		Maximum Impact Receptor General Location	1-Hour SO_2 NAAQS (µg/m³)	Exceed NAAQS (Yes/No)
	UTM East (m)	UTM North (m)			
174.7	465,104.2	3,438,129.7	North Property Boundary	196.0	No

As shown, the maximum 1-hour average SO_2 impact is well below the 1-hour average SO_2 NAAQS. The maximum impact receptor location and the concentration contours are shown in Figures 3-3 and 3-4.

Background concentrations are included in the modeling results shown above.

4.0 CONCLUSION

Based on the modeling results presented in Section 3, the area around the BEC plant complies with the 1-hour average SO2 NAAQS. This modeling results are based on the use of actual emissions for the thermal oxidizer (ID S1201) at the BEC plant.

REFERENCES

U.S. Environmental Protection Agency. 2016. Draft SO_2 NAAQS Designation Modeling Technical Assistance Document. EPA Report, August 2016.

U.S. Environmental Protection Agency. 2011. Additional Clarification Regarding Application of Appendix W Modeling Guidance for the 1-Hour NO_2 Ambient Air Quality Standard. EPA Memorandum, March 1, 2011.

Auer, A.H., 1978. Correlation of Land Use and Cover with Meteorological Anomalies. J. Applied Meteorology, Vol. 17.

Huber, A.H. and W.H. Snyder, 1976. Building Wake Effects on Short Stack Effluents. Preprint Volume for the Third Symposium on Atmospheric Diffusion and Air Quality, American Meteorological Society, Boston, Massachusetts.

U.S. Environmental Protection Agency. 2011. User's Guide for the AMS/EPA Regulatory Model-AERMOD. Through Addendum, December 2011.

U.S. Environmental Protection Agency. 2009. Guideline on Air Quality Models. Appendix W, 40 CFR 52.

U.S. Environmental Protection Agency. 2015. Proposed Guideline on Air Quality Models. Appendix W, 40 CFR 52.

Alabama Department of Environmental Management. 2008. PSD Air Quality Analysis Air Quality Modeling Guidelines. Appendix W, 40 CFR 52.

TABLES

Table 2-1
1-HOUR AVERAGE SO2 NAAQS MODELING
EMISSIONS RATES USED IN MODELING

Source ID	Source Description	Fuel	Heat Input Rate (MMBtu/hr)	Fuel Flow (scf/hr)	Heat Content Value	Heat Content Unit	Sulfur Content Value	Sulfur Content Unit	Hourly Rates (lb/hr)	Adjusted Rate (lb/hr)	Modeled Rate (g/s)
BEC Plant											
FL02	Main Flare	--	--	--	--	--	--	--	1.346 [a]	--	0.17
S1201	Incinerator	--	--	--	--	--	--	--	Actual Hourly [b]	Actual Hourly	Actual Hourly [b]
FL03	Solar Flare	--	--	--	--	--	--	--	--	--	0.001
FL04	Saltwater Flare	--	--	--	--	--	--	--	--	--	0.001
FLR05	Condensate Loading Flare	--	--	--	--	--	--	--	2.331 [a]	--	0.29
CM1101	Clark Engine (800HP)	Natural Gas	13.55	--	1020	Btu/scf	0.25	gr/100 scf	0.009 [c]	--	0.0012
CM1102	Clark Engine (800HP)	Natural Gas	13.55	--	1020	Btu/scf	0.25	gr/100 scf	0.009 [c]	--	0.0012
ENG01	White Superior Engine (1100HP)	Natural Gas	8.25	--	1020	Btu/scf	0.25	gr/100 scf	0.006 [c]	--	0.0007
ENG02	White Superior Engine (1100HP)	Natural Gas	8.25	--	1020	Btu/scf	0.25	gr/100 scf	0.006 [c]	--	0.0007
M1102	TEG Reboiler	Natural Gas	--	3227.7	1020	Btu/scf	0.25	gr/100 scf	0.002 [c]	--	0.0003
BO301A	Boiler	Natural Gas	97	--	1020	Btu/scf	0.25	gr/100 scf	0.068 [c]	--	0.0086
BO301B	Boiler	Natural Gas	97	--	1020	Btu/scf	0.25	gr/100 scf	0.068 [c]	--	0.0086
BO1301A	Boiler	Natural Gas	97	--	1020	Btu/scf	0.25	gr/100 scf	0.068 [c]	--	0.0086
BO1301B	Boiler	Natural Gas	97	--	1020	Btu/scf	0.25	gr/100 scf	0.068 [c]	--	0.0086
St Regis Gas Treating Facility (Breitburn Operating LP) - Jay, Florida											
034	Sulfur Recovery Plants J2 and J3	--	--	--	--	--	--	--	2,001.7 [d]	--	252.2
035	Flares FL01 and FL02	--	--	--	--	--	--	--	166.7 [d]	--	21.0
037	JCSWD 3600 HP NG fired Solar Centaur turbine	Natural Gas	43.1	--	19960	Btu/lb	0.10%	% by wt	4.319 [c]	--	0.5441
038	1000 HP Ingersol Rand compressor engine	--	--	--	--	--	--	--	0.007 [e]	--	0.0009
039	Sulfur Storage Pits Jay 2 and Jay 3 and Loading Racks	--	--	--	--	--	--	--	1.400 [e]	--	0.1764
040	Jay 2 and Jay 3 Process Heaters - 56.7 MMBtu/hr each	Natural Gas	113.4	--	1020	Btu/scf	0.25	gr/100 scf	0.079 [c]	--	0.0100
041	Jay 2 and Jay 3 stabilizer bottom heaters	Natural Gas	56.8	--	1020	Btu/scf	0.25	gr/100 scf	0.040 [c]	--	0.0050
042	Jay Plant Hot Oil Heater	Natural Gas	55.65	--	1020	Btu/scf	0.25	gr/100 scf	0.039 [c]	--	0.0049
043	NG fired 14,300 HP Water Flood Turbine (North)	--	--	--	--	--	--	--	0.530 [e]	--	0.0668
044	5 - 1,000 HP NG Ingersol Rand Compressor Engines	Natural Gas	58	--	19960	Btu/lb	0.10%	% by wt	5.812 [c]	--	0.7323
045	One 5000 HP NG fired Cooper Bessemer "A" Engine	Natural Gas	42	--	1020	Btu/scf	0.25	gr/100 scf	0.029 [c]	--	0.0037
050	14,300-Hp South Water Flood Gas Turbine	Natural Gas	156.1	--	1020	Btu/scf	0.25	gr/100 scf	0.109 [c]	--	0.0138
053	Emergency RICE engines	--	--	--	--	--	--	--	0.106 [e]	--	0.0134
Oil and Gas Production Facility (Escambia Operating Company LLC) - Flomaton, Alabama											
Flare-01	Sour Gas Flare	--	--	--	--	--	--	--	7.39 [f]	--	0.9317

[a] Vanguard data
[b] Actual hourly varying emissions rates for the period 2013-2015 used in modeling.
[c] Rate calculated based on fuel sulfur content
[d] Permit allowable emission rate, permit No. 1130005-023-AV.
[e] Data obtained from FDEP.
[f] Permit limit

Golder Associates

TABLE 3-1
SUMMARY OF THE STACK PARAMETERS USED IN MODELING OPERATION
BIG ESCAMBIA CREEK FACILITY, ALABAMA

Source ID	Source Description	Stack Location UTM Zone 16 East (m)	Stack Location UTM Zone 16 North (m)	Stack Parameters: Stack Height [a] (ft)	Stack Height [a] (m)	Stack Diameter [a] (ft)	Stack Diameter [a] (m)	Exhaust Temperature [b] (ºF)	Exhaust Temperature [b] (ºK)	Exhaust Flow [a] (lb/hr)	Exhaust Flow [a] (acfm)	Exhaust Velocity (ft/s)	Exhaust Velocity (m/s)
BEC Plant [a]													
FL02	Main Flare	465,395	3,437,825	137.7	41.97	2.00	0.61	1,831.7	1,273.0	--	--	65.6	20.0
S1201	Incinerator	465,298	3,437,552	216.0	65.84	4.50	1.37	650.0	616.5	--	155,149.3	162.6	49.6
FL03	Solar Flare	465,580	3,437,725	42.0	12.80	0.38	0.116	1,831.7	1,273.0	--	--	65.6	20.0
FL04	Saltwater Flare	465,205	3,437,779	50.0	15.24	0.67	0.203	1,831.7	1,273.0	--	--	65.6	20.0
FLR05	Condensate Loading Flare	465,089	3,437,763	35.0	10.67	0.50	0.152	1,831.7	1,273.0	--	--	65.6	20.0
CM1101	Clark Engine (800HP)	465,320	3,437,730	20.0	6.10	0.66	0.20	900.0	755.4	9,500.0	5,419.9	264.0	80.5
CM1102	Clark Engine (800HP)	465,330	3,437,730	20.0	6.10	0.66	0.20	900.0	755.4	9,500.0	5,419.9	264.0	80.5
ENG01	White Superior Engine (1100HP)	465,409	3,437,710	20.0	6.10	1.00	0.30	700.0	644.3	12,360.0	6,014.6	127.6	38.9
ENG02	White Superior Engine (1100HP)	465,422	3,437,710	20.0	6.10	1.00	0.30	700.0	644.3	12,360.0	6,014.6	127.6	38.9
M1102	TEG Reboiler	465,280	3,437,645	20.0	6.10	1.17	0.36	850.0	727.6	--	952.2	14.8	4.5
BO301A	Boiler	465,320	3,437,686	30.0	9.14	1.50	0.46	850.0	727.6	--	11,534.6	108.8	33.2
BO301B	Boiler	465,320	3,437,673	30.0	9.14	1.50	0.46	850.0	727.6	--	11,534.6	108.8	33.2
BO1301A	Boiler	465,320	3,437,661	30.0	9.14	1.50	0.46	850.0	727.6	--	11,534.6	108.8	33.2
BO1301B	Boiler	465,320	3,437,649	30.0	9.14	1.50	0.46	850.0	727.6	--	11,534.6	108.8	33.2

[a] Vanguard data.

[b] Except for flares, exhaust temperatures are based on Vanguard data. Flare exhaust temperatures are based on TCEQ (Texas Commission on Environmental Quality) modeling guidance.

[b] Stack actual flow rates (acfm) are based on Vanguard data. For CM1101-1102 and ENG01-02, volume flow rates were estimated from mass flow rates:

Volume flow rate (acfm) = mass flow (lb/hr) / Molecular weight (lb/lb-mole) x 385.4 scf/mole x (460 + Exhaust Temp F)/(460 + 68 F) x hr/60 min

TABLE 3-2
SUMMARY OF THE STACK EXHAUST PARAMETERS USED IN MODELING OPERATION
OTHER FACILITIES INCLUDED IN MODELING

Source ID	Source Description	Stack Location UTM Coordinates - Zone 16 East (m)	North (m)	Stack Parameters Stack Height [a] (ft)	(m)	Stack Diameter [a] (ft)	(m)	Exhaust Temperature [b] (ºF)	(ºK)	Exhaust Flow [c] (lb/hr)	(acfm)	Exhaust Velocity (ft/s)	(m/s)
St Regis Gas Treating Facility (Breitburn Operating LP) - Jay, Florida													
034	Sulfur Recovery Plants J2 and J3	482,800	3,425,600	250.0	76.20	3.0	0.91	900.0	755.4	--	53,406.1 [d]	125.9	38.4
035	Flares FL01 and FL02	482,800	3,425,600	117.0	35.66	3.0	0.91	1,832.0	1,273.2	--	--	65.62	20.0
037	JCSWD 3600 HP NG fired Solar Centaur turbine	482,800	3,425,600	35.0	10.67	2.5	0.76	800.0	699.8	--	17,333.0	58.9	17.9
038	1000 HP Ingersol Rand compressor engine	482,800	3,425,600	30.0	9.14	1.0	0.30	1,059.0	843.7	--	3,726.0	79.1	24.1
039	Sulfur Storage Pits Jay 2 and Jay 3 and Loading Racks	482,800	3,425,600	23.0	7.01	1.0	0.30	271.0	405.9	--	100.0 [e]	2.1	0.6
040	Jay 2 and Jay 3 Process Heaters - 56.7 MMBtu/hr each	482,800	3,425,600	60.0	18.29	4.0	1.22	340.0	444.3	--	14,557.0	19.3	5.9
041	Jay 2 and Jay 3 stabilizer bottom heaters	482,800	3,425,600	60.0	18.29	3.0	0.91	700.0	644.3	--	10,552.0	24.9	7.6
042	Jay Plant Hot Oil Heater	482,800	3,425,600	60.0	18.29	2.0	0.61	630.0	605.4	--	19,438.0	103.1	31.4
043	NG fired 14,300 HP Water Flood Turbine (North)	482,800	3,425,600	30.0	9.14	12.5	3.81	950.0	783.2	--	78,382.0	10.6	3.2
044	5 - 1,000 HP NG Ingersol Rand Compressor Engines	482,800	3,425,600	30.0	9.14	1.0	0.30	1,059.0	843.7	--	3,726.0	79.1	24.1
045	One 5000 HP NG fired Cooper Bessemer "A" Engine	482,800	3,425,600	22.0	6.71	3.0	0.91	950.0	783.2	--	56,200.0	132.5	40.4
050	14,300-Hp South Water Flood Gas Turbine	482,800	3,425,600	30.0	9.14	12.5	3.81	950.0	783.2	--	78,382.0	10.6	3.2
053	Emergency RICE engines	482,800	3,425,600	10.0	3.05	1.0	0.30	700.0	644.3	12,360.0	6,014.6	127.6	38.9
Oil and Gas Production Facility (Escambia Operating Company LLC) - Flomaton, Alabama													
Flare-01	Sour Gas Flare	483,905	3,455,074	60.0	18.29	2.00	0.61	1,832.0	1,273.2	--	--	65.62	20.0

[a] FDEP data for the Breitburn facility, Vanguard data for the Flomaton facility.
[b] Except for flares, exhaust temperatures are based on FDEP data for the Breitburn facility, Vanguard data for the Flomaton facility. Flare exhaust temperatures are based on TCEQ modeling guidance.
[c] Except for the Source ID 034, stack actual flow rates (acfm) are based on FDEP data.
[d] Exhaust flow rate estimated based on the permit allowable acid gas feed rate and the Claus Reaction used in sulfur recovery plants.

Claus Reaction

$$2H_2S + 3O_2 \rightarrow 2SO_2 + 2H_2O + \text{heat}$$

Permit allowable acid gas feed rate =	4.40E+06	scf/day
H2S mole fraction =	0.81	
H2S mole flow rate =	9.25E+03	mole/day
O2 mole flow rate =	1.39E+04	mole/day
Air mole flow rate =	6.61E+04	mole/day
Air volume flow rate =	2.55E+07	scf/day
Total inlet flow =	2.99E+07	scf/day
Total inlet flow =	1.24E+06	scf/hr
Exhaust temperature =	900.0	F
Exhaust volume flow =	3,204,365.1	acf/hr
Exhaust volume flow =	53,406.1	acfm

[e] Typical value assumed.

FIGURES

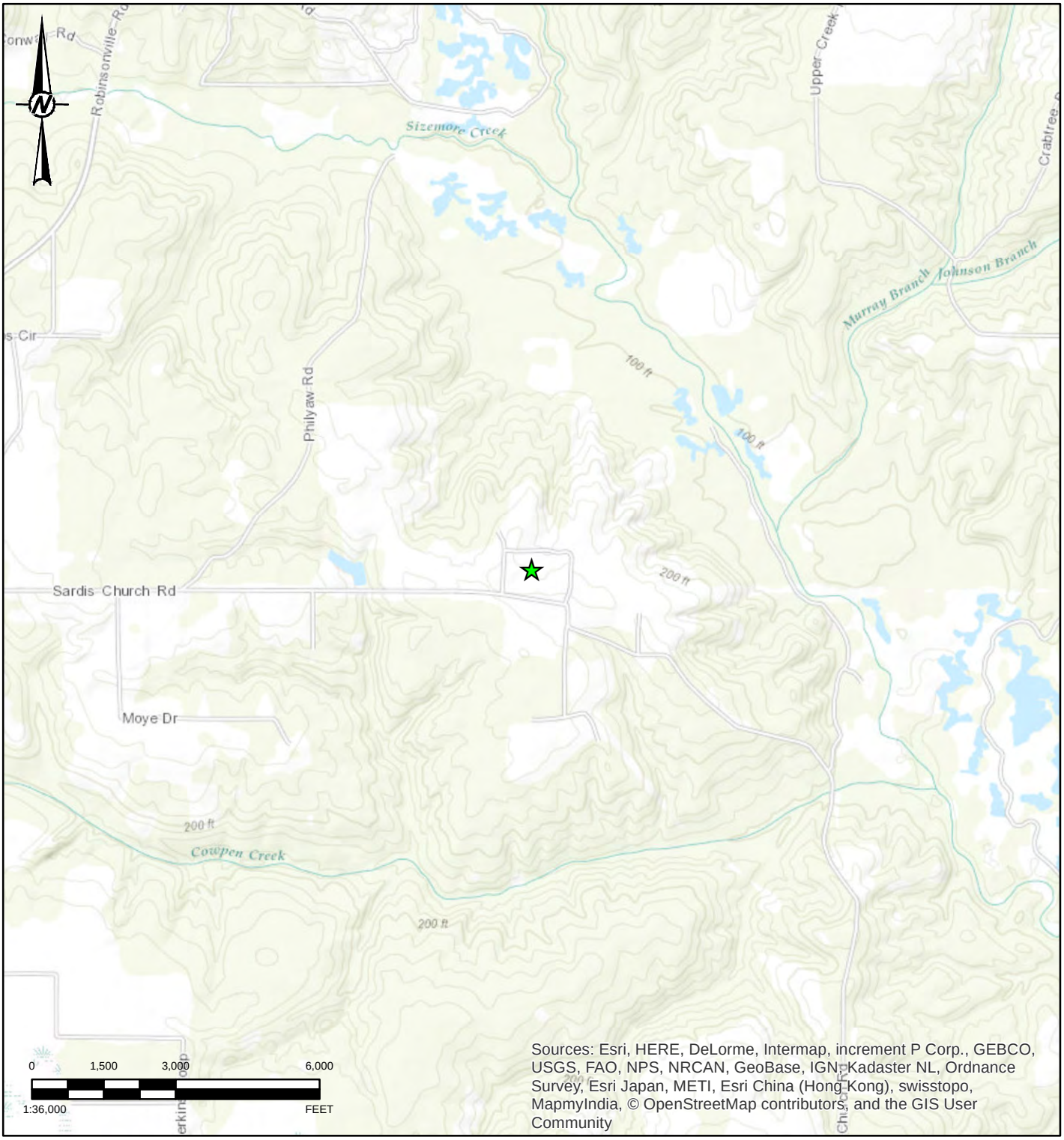

LEGEND

Facility Location

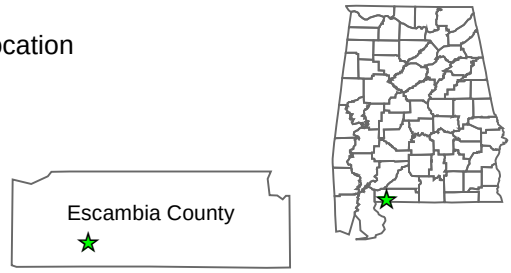

REFERENCE(S)
COORDINATE SYSTEM: NAD 1983 STATEPLANE ALABAMA WEST FIPS 0102 FEET
PROJECTION: TRANSVERSE MERCATOR
DATUM: NORTH AMERICAN 1983

CLIENT
VANGUARD LLC

PROJECT
BIG ESCAMBIA CREEK PLANT

TITLE
GENERAL FACILITY LOCATION

CONSULTANT
Golder Associates

YYYY-MM-DD	2017-01-09
DESIGNED	GFD
PREPARED	GFD
REVIEWED	SM
APPROVED	SM

PROJECT NO.	CONTROL	REV.	FIGURE
1667189	A001	0	**2-1**

PATH: G:\PROJECTS\Vanguard LLC\Big Escambia Creek Plant\09 PROJECTS\1667189 Big Escambia Creek Plant\A Modeling\02 PRODUCTION\MXD\1667189 A001 Location.mxd
IF THIS MEASUREMENT DOES NOT MATCH WHAT IS SHOWN, THE SHEET SIZE HAS BEEN MODIFIED FROM: ANSI A
1 in
0

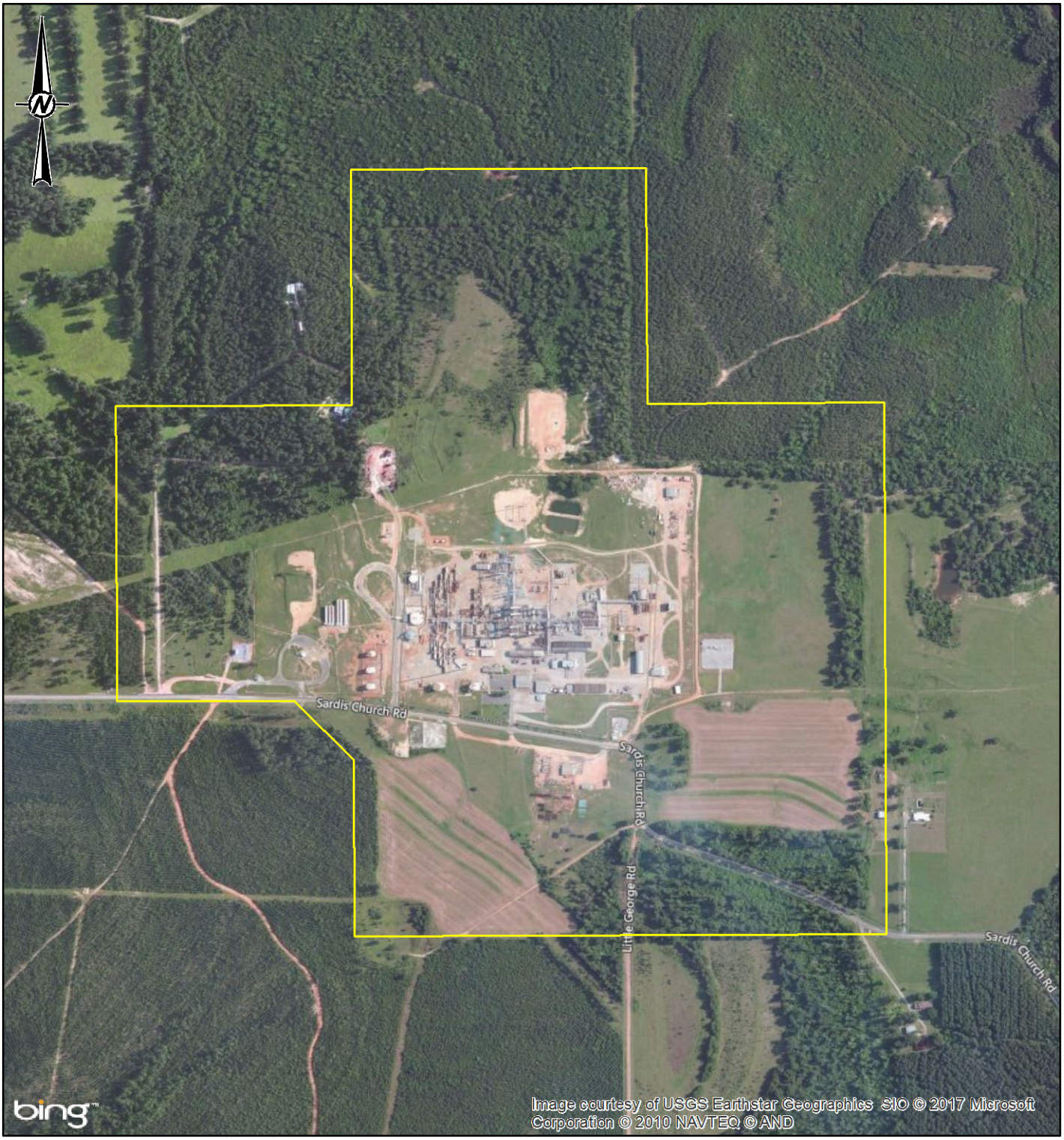

LEGEND

Ambient Air Boundary

0 400 800 1,600

1:9,600 FEET

REFERENCE(S)

1. PROPERTY BOUNDARY, GOLDER ASSOCIATES INC., 2017.

COORDINATE SYSTEM: NAD 1983 STATEPLANE ALABAMA WEST FIPS 0102 FEET
PROJECTION: TRANSVERSE MERCATOR
DATUM: NORTH AMERICAN 1983

CLIENT
VANGUARD LLC

PROJECT
BIG ESCAMBIA CREEK PLANT

TITLE
FACILITY PLOT PLAN

CONSULTANT

Golder Associates

YYYY-MM-DD	2017-01-12
DESIGNED	GFD
PREPARED	GFD
REVIEWED	SM
APPROVED	SM

PROJECT NO.	CONTROL	REV.	FIGURE
1667189	A002	0	2-2

PATH: G:\PROJECTS\Vanguard LLC\Big Escambia Creek Plant\09 PROJECTS\1667189 Big Escambia Creek Plant\A Modeling\02 PRODUCTION\MXD\1667189 A002 Facility Plot Plan.mxd

IF THIS MEASUREMENT DOES NOT MATCH WHAT IS SHOWN, THE SHEET SIZE HAS BEEN MODIFIED FROM: ANSI A
1 in
0

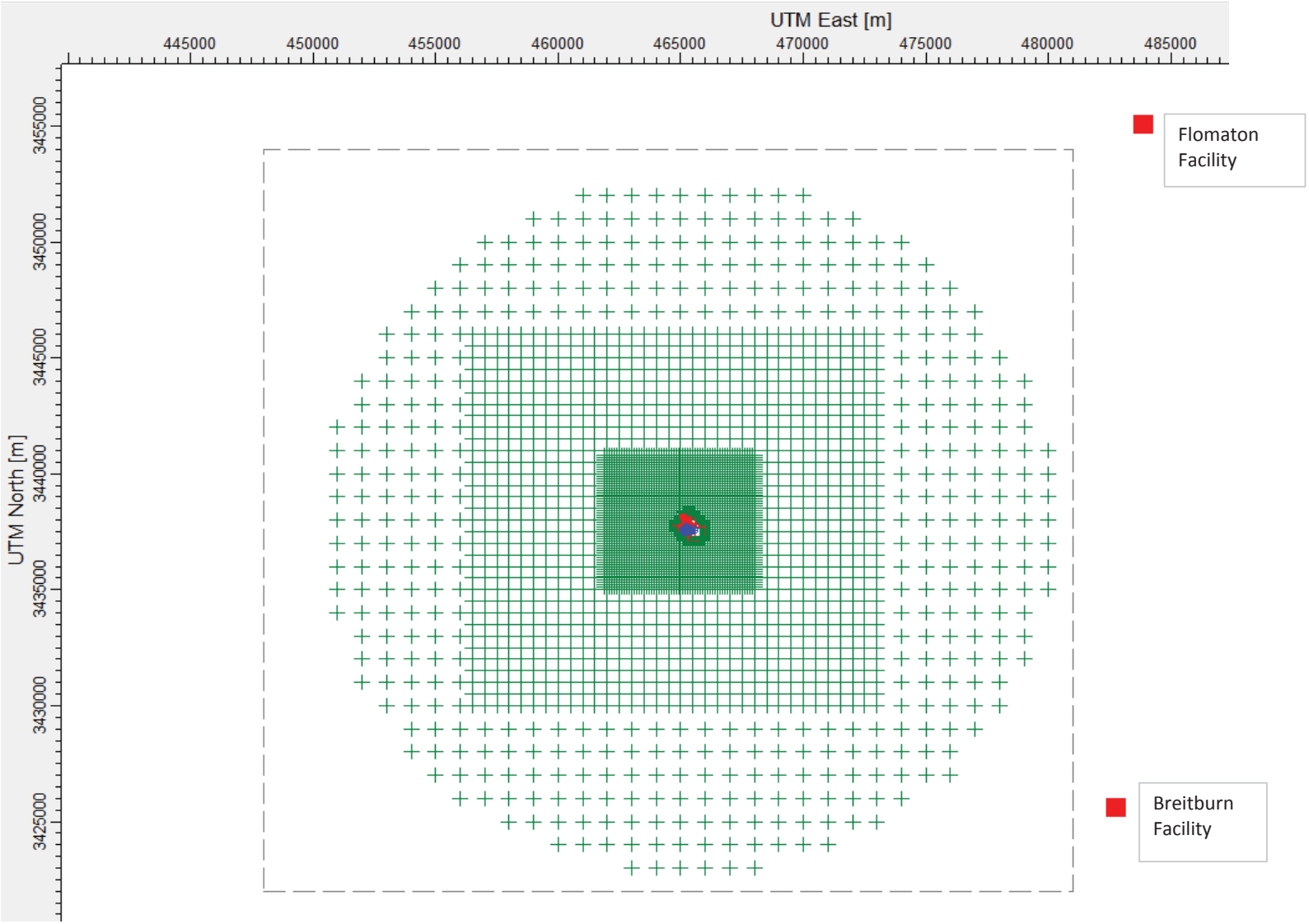

Figure 3-1
BEC Plant 1-Hr SO2 Designation Modeling, AL
Full Receptor Grid

Source: Golder, 2017.

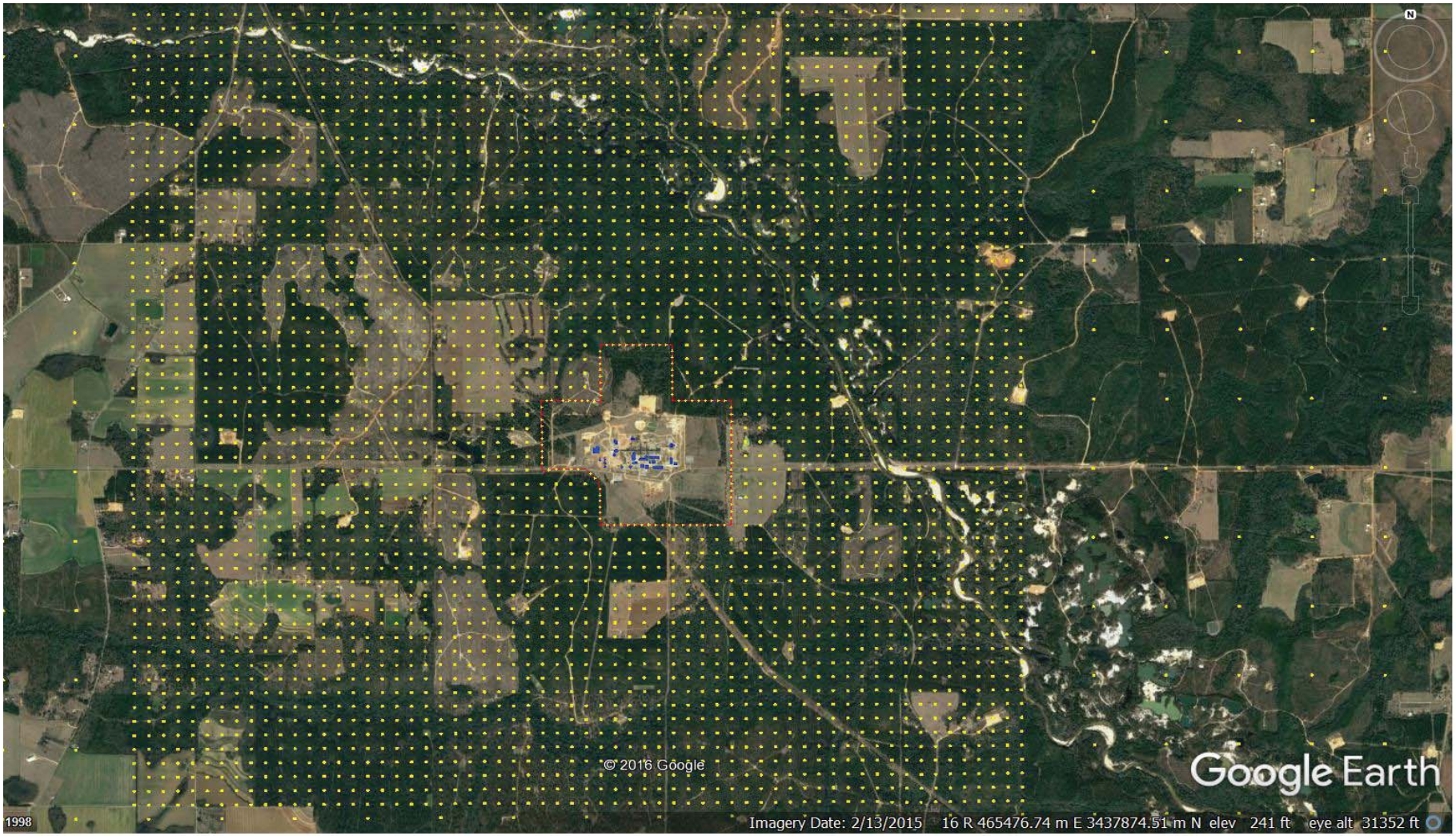

Figure 3-2
BEC Plant 1-Hr SO2 Designation Modeling, AL
Near-Field Receptor Grid

Source: Golder, 2017.

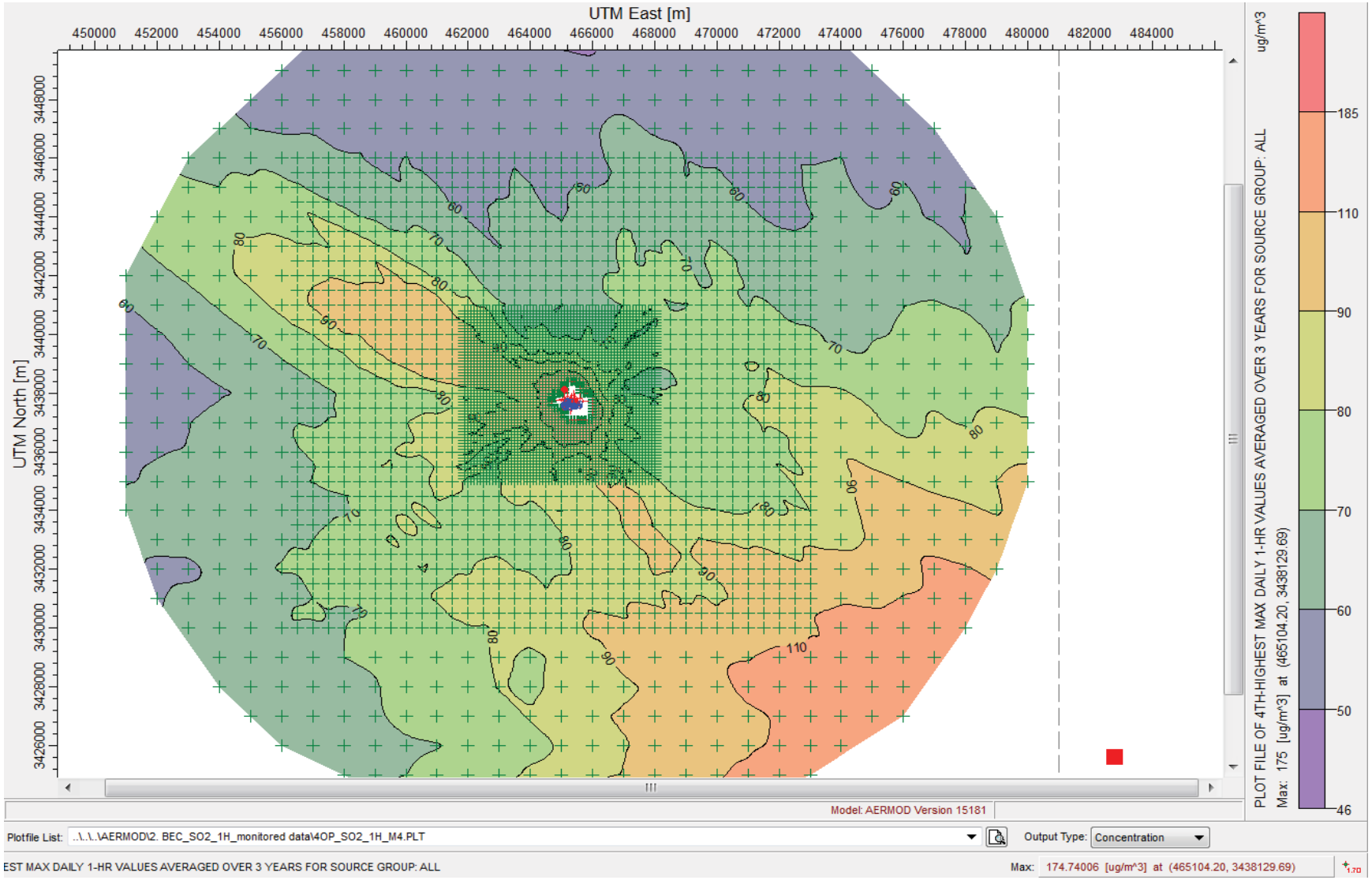

Figure 3-3
BEC Plant 1-Hr SO2 Designation Modeling, AL
Concentration Plot for 3-Yr Average Max. Daily 1-Hr Average SO2, Full Receptor Grid

Source: Golder, 2017.

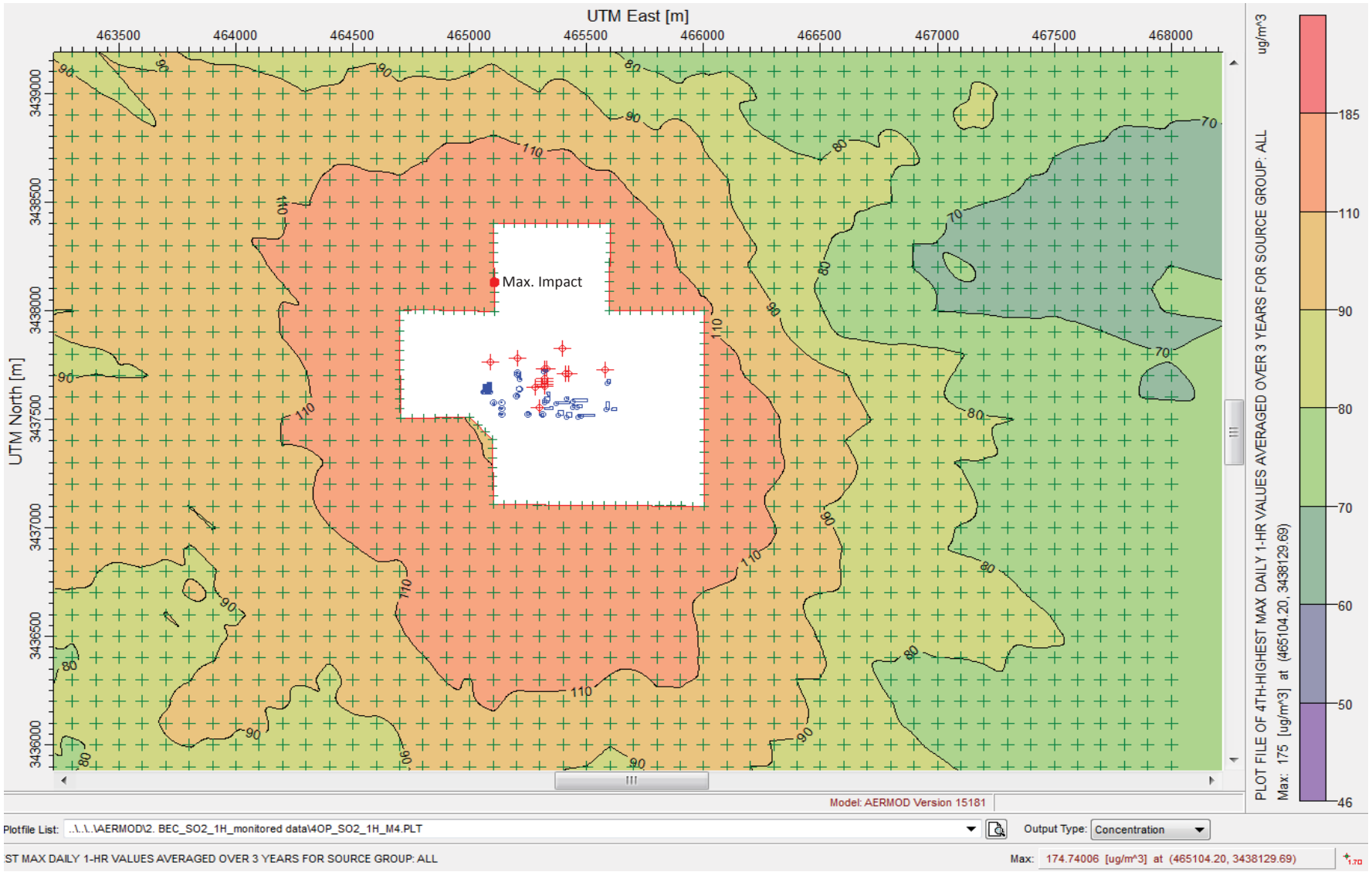

Figure 3-4
BEC Plant 1-Hr SO2 Designation Modeling, AL
Concentration Plot for 3-Yr Average Max. Daily 1-Hr Average SO2, Near-Field Receptor Grid

Source: Golder, 2017.

APPENDIX A

MODELING PROTOCOL FOR SO_2 1-HOUR NAAQS

ESCAMBIA OPERATING COMPANY, LLC; BIG ESCAMBIA CREEK PLANT
ESCAMBIA COUNTY, ALABAMA
DATA REQUIREMENTS RULE (DRR) FOR SO2 1-HOUR NAAQS

MODELING PROTOCOL FOR SO2 1-HOUR NAAQS USING PERMIT ALLOWABLE

PREPARED BY:

Escambia Operating Company, LLC.
5847 San Felipe, Suite 3000
Houston, Texas 77057

December 2016

TABLE OF CONTENTS

1. INTRODUCTION 1-1
1.1 BACKGROUND 1-1

2. EMISSION SOURCES 2-1

3. METEOROLOGICAL DATA 3-4
3.1 WEATHER STATION DATA 3-4

4. MODELING METHODOLOGY 4-1
4.1 SELECTED MODELS 4-1
4.2 RECEPTOR AND ELEVATIONS 4-1
4.3 BUILDING DOWNWASH 4-1
4.4 GEP STACK HEIGHTS 4-1
4.5 BACKGROUND CONCENTRATION 4-2
4.6 EVALUATION OF SO2 SOURCES FROM OTHER SITES 4-2

APPENDIX A LIST OF STRUCTURE FOR DOWNWASH

APPENDIX B MAP WITH STRUCTURE AND PROPERTY BOUNDARY

1.1 BACKGROUND

On August 10, 2015, EPA issued a final Data Requirements Rule (DRR) requiring states to provide data to characterize current air quality in areas with large sources of sulfur dioxide (SO2) emissions to identify maximum 1-hour SO2 concentration in ambient air. The air quality data developed by the states in accordance with the rule will be used by EPA in future rounds of area designations for the 2010 1-hour SO2 NAAQS.

Under the rule, states must submit a list to EPA by January 15, 2016, identifying sources that 1) are not located in a designated nonattainment area, and 2) have actual SO2 emissions that exceed a 2,000 tons per year annual threshold during the most recent year for which emissions data is available, or are identified by the state or EPA Regional Administrator as requiring further air quality characterization. EPA anticipates discussions with states in early 2016 regarding these additional sources.

The rule provides three options for characterizing air quality in areas with listed sources, listed in the table below. States must notify EPA by July 1, 2016 which option is chosen. Designation deadlines were set by a consent decree in Sierra Club v. McCarthy, No. 13-3953 (N.D. Cal.).

Option	Description and Deadlines for State	Designation Deadline*
Monitoring	Monitors must be operational by January 1, 2017.	December 31, 2020
Modeling	State must submit modeling protocol for each source by July 1, 2016. Modeling analyses must be submitted by January 13, 2017.	December 31, 2017
Federally enforceable emissions limits	State must notify EPA that it will impose new SO2 limits and permit must be revised to accommodate the new limit by January 13, 2017.	December 31, 2017
*For certain coal-fired power plants and areas with newly monitored SO2 NAAQS violations, the designations deadline is July 2, 2016, regardless of which option is used, which does not apply to The Big Escambia Creek (BEC) plant.		

Under the DRR rule, EPA has proposed a hybrid modeling and monitoring approach to show compliance with the 1-hour SO_2 NAAQS due to the uniqueness of SO_2 1-hour standard, such as lacking of SO2 monitors to supply sufficient data for the 1-hour SO2 standard area designation. EPA recommends that each state should supply air dispersion modeling protocols and work closely with its respective EPA regional office for site - specific air dispersion modeling protocols review and approval.

The BEC plant owned by Vanguard Natural Resources, LLC (Vanguard) is located in Escambia County, AL and is a natural gas processing and sulfur recovery plant. The Alabama Department of Environmental

Management (ADEM) has identified the BEC plant as subject to the DRR rule, since the annual actual SO2 emissions are greater than 2,000 tons in year 2014.

Following conversation with ADEM, Vanguard has decided to perform the 1-hour average SO2 NAAQS area designation modeling in the area around the BEC plant. Based on the results of the modeling analysis, Vanguard may decide to adjust the existing emissions limits in order to demonstrate compliance with the 1-hour SO2 NAAQS. Vanguard will perform the analysis according to draft EPA guide "SO2 NAAQS Designations Modeling Technical Assistance Document" (TAD) (August 2016), final DRR for the 2010 1-Hour Sulfur Dioxide (SO2) Primary National Ambient Air Quality Standard (NAAQS) dated on August 10, 2015, and email and phone conversations with ADEM.

2. EMISSION SOURCES

Vanguard will model the SO_2 emissions sources at the BEC plant. Based on the comments received from EPA, Vanguard will also include in the modeling the Escambia Operating Company facility in Flomation, Alabama and the Breitburn Operating, L.P. facility located in Jay, Florida. Emissions rates and stack parameters for the sources at the BEC are summarized in Tables 2.1 and 2.2, respectively. Table 2.1 also presents the emissions rates for SO_2 sources at the Flomaton and Breitburn facilities. Stack parameters for the Flomaton and Breitburn facility sources are presented in Table 2.3. Based on the recent conversations with ADEM, Vanguard will use actual emissions rates for the thermal oxidizer for the period 2013 – 2015. According to EPA's SO_2 designation modeling TAD, actual stack height may be used for the thermal oxidizer stack.

The information listed below will be used in modeling the flare as a point source per ADEM guide:

Stack Height= Flare stack height (or GEP stack height if actual height is greater than 65 meters)
Exit Velocity= 20 meters per second
Exit Temperature= 1273 degrees Kelvin

Compute an effective diameter as follows:

Ds=(9.88 x 10-4)(0.45H)1/2 where H= gross heat release in cal/sec reduced by 55% to account for radiative heat losses

Table 2.1
1-HOUR AVERAGE SO2 NAAQS MODELING
EMISSIONS RATES USED IN MODELING

Source ID	Source Description	Fuel	Heat Input Rate (MMBtu/hr)	Fuel Flow (scf/hr)	Heat Content Value	Heat Content Unit	Sulfur Content Value	Sulfur Content Unit	Hourly Rates (lb/hr)	Adjusted Rate (lb/hr)	Modeled Rate (g/s)
BEC Plant											
FL02	Main Flare	--	--	--	--	--	--	--	1.346 [a]	--	0.17
S1201	Incinerator	--	--	--	--	--	--	--	Actual Hourly [b]	Actual Hourly	Actual Hourly [b]
FL03	Solar Flare	--	--	--	--	--	--	--	--	--	0.001
FL04	Saltwater Flare	--	--	--	--	--	--	--	--	--	0.001
FLR05	Condensate Loading Flare	--	--	--	--	--	--	--	2.331 [a]	--	0.29
CM1101	Clark Engine (800HP)	Natural Gas	13.55	--	1020	Btu/scf	0.25	gr/100 scf	0.009 [c]	--	0.0012
CM1102	Clark Engine (800HP)	Natural Gas	13.55	--	1020	Btu/scf	0.25	gr/100 scf	0.009 [c]	--	0.0012
ENG01	White Superior Engine (1100HP)	Natural Gas	8.25	--	1020	Btu/scf	0.25	gr/100 scf	0.006 [c]	--	0.0007
ENG02	White Superior Engine (1100HP)	Natural Gas	8.25	--	1020	Btu/scf	0.25	gr/100 scf	0.006 [c]	--	0.0007
M1102	TEG Reboiler	Natural Gas	--	3227.7	1020	Btu/scf	0.25	gr/100 scf	0.002 [c]	--	0.0003
BO301A	Boiler	Natural Gas	97	--	1020	Btu/scf	0.25	gr/100 scf	0.068 [c]	--	0.0086
BO301B	Boiler	Natural Gas	97	--	1020	Btu/scf	0.25	gr/100 scf	0.068 [c]	--	0.0086
BO1301A	Boiler	Natural Gas	97	--	1020	Btu/scf	0.25	gr/100 scf	0.068 [c]	--	0.0086
BO1301B	Boiler	Natural Gas	97	--	1020	Btu/scf	0.25	gr/100 scf	0.068 [c]	--	0.0086
St Regis Gas Treating Facility (Breitburn Operating LP) - Jay, Florida											
034	Sulfur Recovery Plants J2 and J3	--	--	--	--	--	--	--	2,001.7 [d]	--	252.2
035	Flares FL01 and FL02	--	--	--	--	--	--	--	166.7 [d]	--	21.0
037	JCSWD 3600 HP NG fired Solar Centaur turbine	Natural Gas	43.1	--	19960	Btu/lb	0.10%	% by wt	4.319 [c]	--	0.5441
038	1000 HP Ingersol Rand compressor engine	--	--	--	--	--	--	--	0.007 [e]	--	0.0009
039	Sulfur Storage Pits Jay 2 and Jay 3 and Loading Racks	--	--	--	--	--	--	--	1.400 [e]	--	0.1764
040	Jay 2 and Jay 3 Process Heaters - 56.7 MMBtu/hr each	Natural Gas	113.4	--	1020	Btu/scf	0.25	gr/100 scf	0.079 [c]	--	0.0100
041	Jay 2 and Jay 3 stabilizer bottom heaters	Natural Gas	56.8	--	1020	Btu/scf	0.25	gr/100 scf	0.040 [c]	--	0.0050
042	Jay Plant Hot Oil Heater	Natural Gas	55.65	--	1020	Btu/scf	0.25	gr/100 scf	0.039 [c]	--	0.0049
043	NG fired 14,300 HP Water Flood Turbine (North)	--	--	--	--	--	--	--	0.530 [e]	--	0.0668
044	5 - 1,000 HP NG Ingersol Rand Compressor Engines	Natural Gas	58	--	19960	Btu/lb	0.10%	% by wt	5.812 [c]	--	0.7323
045	One 5000 HP NG fired Cooper Bessemer "A" Engine	Natural Gas	42	--	1020	Btu/scf	0.25	gr/100 scf	0.029 [c]	--	0.0037
050	14,300-Hp South Water Flood Gas Turbine	Natural Gas	156.1	--	1020	Btu/scf	0.25	gr/100 scf	0.109 [c]	--	0.0138
053	Emergency RICE engines	--	--	--	--	--	--	--	0.106 [e]	--	0.0134
Oil and Gas Production Facility (Escambia Operating Company LLC) - Flomaton, Alabama											
Flare-01	Sour Gas Flare	--	--	--	--	--	--	--	7.39 [f]	--	0.9317

[a] Vanguard data
[b] Actual hourly varying emissions rates for the period 2013-2015 will be used in modeling.
[c] Rate calculated based on fuel sulfur content
[d] Permit allowable emission rate, permit No. 1130005-023-AV.
[e] Data obtained from FDEP.
[f] Permit limit

TABLE 2.2
SUMMARY OF THE STACK PARAMETERS USED IN MODELING OPERATION
BIG ESCAMBIA CREEK FACILITY, AL

Source ID	Source Description	Stack Location UTM Zone 16 East (m)	Stack Location UTM Zone 16 North (m)	Stack Height [a] (ft)	Stack Height [a] (m)	Stack Diameter [a] (ft)	Stack Diameter [a] (m)	Exhaust Temperature [b] (°F)	Exhaust Temperature [b] (°K)	Exhaust Flow [c] (lb/hr)	Exhaust Flow [c] (acfm)	Exhaust Velocity (ft/s)	Exhaust Velocity (m/s)
BEC Plant [a]													
FL02	Main Flare	465,395	3,437,825	137.7	41.97	2.00	0.61	1,831.7	1,273.0	--	--	65.6	20.0
S1201	Incinerator	465,298	3,437,552	216.0	65.84	4.50	1.37	650.0	616.5	--	155,173.3	162.6	49.6
FL03	Solar Flare	465,580	3,437,725	42.0	12.80	0.38	0.12	1,831.7	1,273.0	--	--	65.6	20.0
FL04	Saltwater Flare	465,205	3,437,779	50.0	15.24	0.67	0.20	1,831.7	1,273.0	--	--	65.6	20.0
FLR05	Condensate Loading Flare	465,089	3,437,763	35.0	10.67	0.50	0.15	850.0	1,273.0		12.2	1.0	0.3
CM1101	Clark Engine (800HP)	465,320	3,437,730	20.0	6.10	0.66	0.20	900.0	755.4	9,500.0	5,419.9	264.0	80.5
CM1102	Clark Engine (800HP)	465,330	3,437,730	20.0	6.10	0.66	0.20	900.0	755.4	9,500.0	5,419.9	264.0	80.5
ENG01	White Superior Engine (1100HP)	465,409	3,437,710	20.0	6.10	1.00	0.30	700.0	644.3	12,360.0	6,014.6	127.6	38.9
ENG02	White Superior Engine (1100HP)	465,422	3,437,710	20.0	6.10	1.00	0.30	700.0	644.3	12,360.0	6,014.6	127.6	38.9
M1102	TEG Reboiler	465,280	3,437,645	20.0	6.10	1.17	0.36	850.0	727.6	--	952.2	14.8	4.5
BO301A	Boiler	465,320	3,437,686	30.0	9.14	1.50	0.46	850.0	727.6	--	11,534.6	108.8	33.2
BO301B	Boiler	465,320	3,437,673	30.0	9.14	1.50	0.46	850.0	727.6	--	11,534.6	108.8	33.2
BO1301A	Boiler	465,320	3,437,661	30.0	9.14	1.50	0.46	850.0	727.6	--	11,534.6	108.8	33.2
BO1301B	Boiler	465,320	3,437,649	30.0	9.14	1.50	0.46	850.0	727.6	--	11,534.6	108.8	33.2

[a] Vanguard data.
[b] Except for flares, exhaust temperatures are based on Vanguard data. Flare exhaust temperatures are based on TCEQ modeling guidance.
[b] Stack actual flow rates (acfm) are based on Vanguard data. For CM1101-1102 and ENG01-02, volume flow rates were estimated from mass flow rates:
Volume flow rate (acfm) = mass flow (lb/hr) / Molecular weight (lb/lb-mole) x 385.4 scf/mole x (460 + Exhaust Temp F)/(460 + 68 F) x hr/60 min
[c] Emission Units, operating hours and stack parameters based on the last Title V Renewal, Permit No. 1130005-023-AV (FDEP)

TABLE 2.3
SUMMARY OF THE STACK EXHAUST PARAMETERS USED IN MODELING OPERATION
OTHER FACILITIES INCLUDED IN MODELING

Source ID	Source Description	Stack Location UTM Coordinates - Zone 16 East (m)	North (m)	Stack Parameters Stack Height [a] (ft)	(m)	Stack Diameter [a] (ft)	(m)	Exhaust Temperature [b] (°F)	(°K)	Exhaust Flow [c] (lb/hr)	(acfm)	Exhaust Velocity (ft/s)	(m/s)
St Regis Gas Treating Facility (Breitburn Operating LP) - Jay, Florida [c]													
034	Sulfur Recovery Plants J2 and J3	482,800	3,425,600	250.0	76.20	3.0	0.91	900.0	755.4	--	53,406.1 [d]	125.9	38.4
035	Flares FL01 and FL02	482,800	3,425,600	117.0	35.66	3.0	0.91	1,832.0	1,273.2	--	--	65.62	20.0
037	JCSWD 3600 HP NG fired Solar Centaur turbine	482,800	3,425,600	35.0	10.67	2.5	0.76	800.0	699.8	--	17,333.0	58.9	17.9
038	1000 HP Ingersol Rand compressor engine	482,800	3,425,600	30.0	9.14	1.0	0.30	1,059.0	843.7	--	3,726.0	79.1	24.1
039	Sulfur Storage Pits Jay 2 and Jay 3 and Loading Racks	482,800	3,425,600	23.0	7.01	1.0	0.30	271.0	405.9	--	100.0 [e]	2.1	0.6
040	Jay 2 and Jay 3 Process Heaters - 56.7 MMBtu/hr each	482,800	3,425,600	60.0	18.29	4.0	1.22	340.0	444.3	--	14,557.0	19.3	5.9
041	Jay 2 and Jay 3 stabilizer bottom heaters	482,800	3,425,600	60.0	18.29	3.0	0.91	700.0	644.3	--	10,552.0	24.9	7.6
042	Jay Plant Hot Oil Heater	482,800	3,425,600	60.0	18.29	2.0	0.61	630.0	605.4	--	19,438.0	103.1	31.4
043	NG fired 14,300 HP Water Flood Turbine (North)	482,800	3,425,600	30.0	9.14	12.5	3.81	950.0	783.2	--	78,382.0	10.6	3.2
044	5 - 1,000 HP NG Ingersol Rand Compressor Engines	482,800	3,425,600	30.0	9.14	1.0	0.30	1,059.0	843.7	--	3,726.0	79.1	24.1
045	One 5000 HP NG fired Cooper Bessemer "A" Engine	482,800	3,425,600	22.0	6.71	3.0	0.91	950.0	783.2	--	56,200.0	132.5	40.4
050	14,300-Hp South Water Flood Gas Turbine	482,800	3,425,600	30.0	9.14	12.5	3.81	950.0	783.2	--	78,382.0	10.6	3.2
053	Emergency RICE engines	482,800	3,425,600	10.0	3.05	1.0	0.30	700.0	644.3	12,360.0	6,014.6	127.6	38.9
Oil and Gas Production Facility (Escambia Operating Company LLC) - Flomaton, Alabama													
Flare-01	Sour Gas Flare	483,905	3,455,074	60.0	18.29	2.00	0.61	1,832.0	1,273.2	--	--	65.62	20.0

[a] Vanguard data.
[b] Except for flares, exhaust temperatures are based on Vanguard data. Flare exhaust temperatures are based on TCEQ modeling guidance.
[b] Stack actual flow rates (acfm) are based on Vanguard data. For CM1101-1102 and ENG01-02, volume flow rates were estimated from mass flow rates:
Volume flow rate (acfm) = mass flow (lb/hr) / Molecular weight (lb/lb-mole) x 385.4 scf/mole x (460 + Exhaust Temp F)/(460 + 68 F) x hr/60 min
[c] Emission Units, operating hours and stack parameters based on the last Title V Renewal, Permit No. 1130005-023-AV (FDEP)

3.1 WEATHER STATION DATA

ADEM recommends surface meteorological data from Evergreen, AL and upper air data from Alabaster, AL be used for sources located in Escambia County. ADEM supplied complete processed meteorological data (Stages 1-3) for the period 2013 to 2015. The surface station 53820 is located at Evergreen, Alabama (31.416N, -87.044W).

4. MODELING METHODOLOGY

4.1 SELECTED MODELS

Vanguard will perform the modeling using allowable emission rate or use the actual emission rate.

Per email exchange with ADEM, Vanguard will use the 4th-highest max daily 1-hr values averaged over three (3) consecutive years (Year 2013 to 2015) from modeling, add it to the SO2 background concentration to compare with 196 µg/m^3 1-Hr SO2 NAAQS standard.

4.2 RECEPTOR AND ELEVATIONS

The following receptor grid will be used for the 1-hour average SO2 area designation modeling:

- Fine grid: 100-meter spacing receptors start from proper line to 2 km at each source
- Medium grid: 250-meter spacing receptors start from 2 km to 7 km at each source
- Coarse grid: 500-meter spacing receptors start from 7 km to 15 km at each source

Vanguard will obtain the national elevation dataset (NED) from USGS and calculate the elevations of all receptors, sources, and structures. The Digital Elevation Model (DEM) data will not be used since the NED data are more recent and they are updated frequently.

4.3 BUILDING DOWNWASH

Direction-specific building dimensions and the dominant downwash structure parameters used as inputs to the dispersion models are determined using the EPA Building Profile Input Program with PRIME enhancement (BPIP-PRIME), version 04274.

Lists of identified structures and tanks that will cause downwash effect are presented in Appendix A and a map with those structures and BEC Surface Ownership Boundary can be found in Appendix B. For the final modeling run, a revised property boundary including leases from beyond the BEC surface ownership will be used.

4.4 GEP STACK HEIGHTS

Actual hourly varying emissions rates will be used in the air dispersion modeling and therefore, according to the SO2 Modeling TAD, the actual stack height may be used in the modeling instead of being limited by the GEP stack height..

4.5 BACKGROUND CONCENTRATION

Per email exchange with ADEM, 1-Hr SO_2 background concentration will be based on a monitor, which is located at Centreville Search Site. The SO_2 Modeling TAD recommends use of seasonally and hour-of-day varying background concentrations, which were calculated from the Centreville monitoring data for the period 2013-2015. The background concentration are presented below in ppb. As recommended by the SO_2 Modeling TAD, each hour-of-day value is 3-year average of the second highest concentration of the seasonal distribution of the data for the hour.

	1:00 AM	2:00 AM	3:00 AM	4:00 AM	5:00 AM	6:00 AM	7:00 AM	8:00 AM	9:00 AM	10:00 AM	11:00 AM	12:00 PM
Winter	3.87	3.06	2.61	3.31	5.04	6.71	7.52	6.80	4.10	4.49	5.61	4.39
Spring	2.00	1.89	1.78	1.92	1.87	1.95	2.65	4.60	3.69	3.16	2.27	2.23
Summer	2.53	2.77	2.70	2.01	3.28	5.93	7.67	7.43	3.99	5.17	2.90	3.30
Fall	1.66	2.13	3.63	6.45	8.22	8.32	8.75	8.69	6.22	4.15	4.60	2.34

	1:00 PM	2:00 PM	3:00 PM	4:00 PM	5:00 PM	6:00 PM	7:00 PM	8:00 PM	9:00 PM	10:00 PM	11:00 PM	12:00 AM
Winter	3.93	4.00	3.91	4.06	3.50	4.15	3.45	5.99	2.88	4.23	4.54	3.56
Spring	3.08	3.41	3.16	2.95	2.97	2.33	2.45	2.42	1.58	2.46	2.75	2.40
Summer	3.13	2.81	1.96	1.96	2.90	2.41	2.27	2.38	1.16	1.34	1.20	1.66
Fall	1.92	1.79	2.05	1.34	1.30	1.20	1.04	1.69	1.65	2.09	3.10	1.96

4.6 EVALUATION OF SO2 SOURCES FROM OTHER SITES

Based on EPA comments on the draft modeling protocol previously submitted, Vanguard will include the SO_2 emissions sources from the following facilities:

- Escambia Operating Company facility in Flomation, Alabama, and
- Breitburn Operating, L.P. facility located in Jay, Florida

Emissions rates and stack parameters for the SO_2 emissions sources were previously presented in Tables 2.1 and 2.2

APPENDIX A

List of Structures for Downwash

TABLE A-1 POLYGON STRUCTURES

Building ID	Tier	Elevation, m	Height, ft	Number of Corners
str-1	1	254.82	12	4
str-2	1	256.07	12	4
str-3	1	256.82	20	4
str-4	1	258.07	12	4
str-5	1	258.76	17	4
str-6	1	259.74	18	4
STR-7	1	261.71	15	4
BLDG-01	1	261.22	20	6
BLDG-02	1	260.56	20	4
BLDG-03	1	260.56	20	4
BLDG-04	1	261.25	25	4
BLDG-05	1	261.29	25	4
BLDG-06	1	261.09	25	4
BLDG-07	1	261.48	25	4
BLDG-08	1	260.99	25	4
BLDG-09	1	260.43	25	6
BLDG-10	1	261.15	25	4
BLDG-11	1	260.47	25	4
BLDG-12	1	258.96	25	4
BLDG-13	1	259.78	25	4
BLDG-14	1	262.73	25	4
BLDG-15	1	262.53	25	6
BLDG-16	1	252.43	25	4
BLDG-17	1	260.27	25	4

TABLE A-2 CIRCULAR STRUCTURES

Building ID	Elevation, m	Height, ft
T101C	260.14	35
T101B	260.79	35
T101A	261.52	28
T-04	263.22	25
T-05	262.89	30
T-06	261.35	20
T-07	261.19	8
T-08	260.79	20
T-09	260.96	20
T-9001	261.02	32

MAP WITH BEC STRUCTURE AND SURFACE OWNERSHIP BOUNDARY

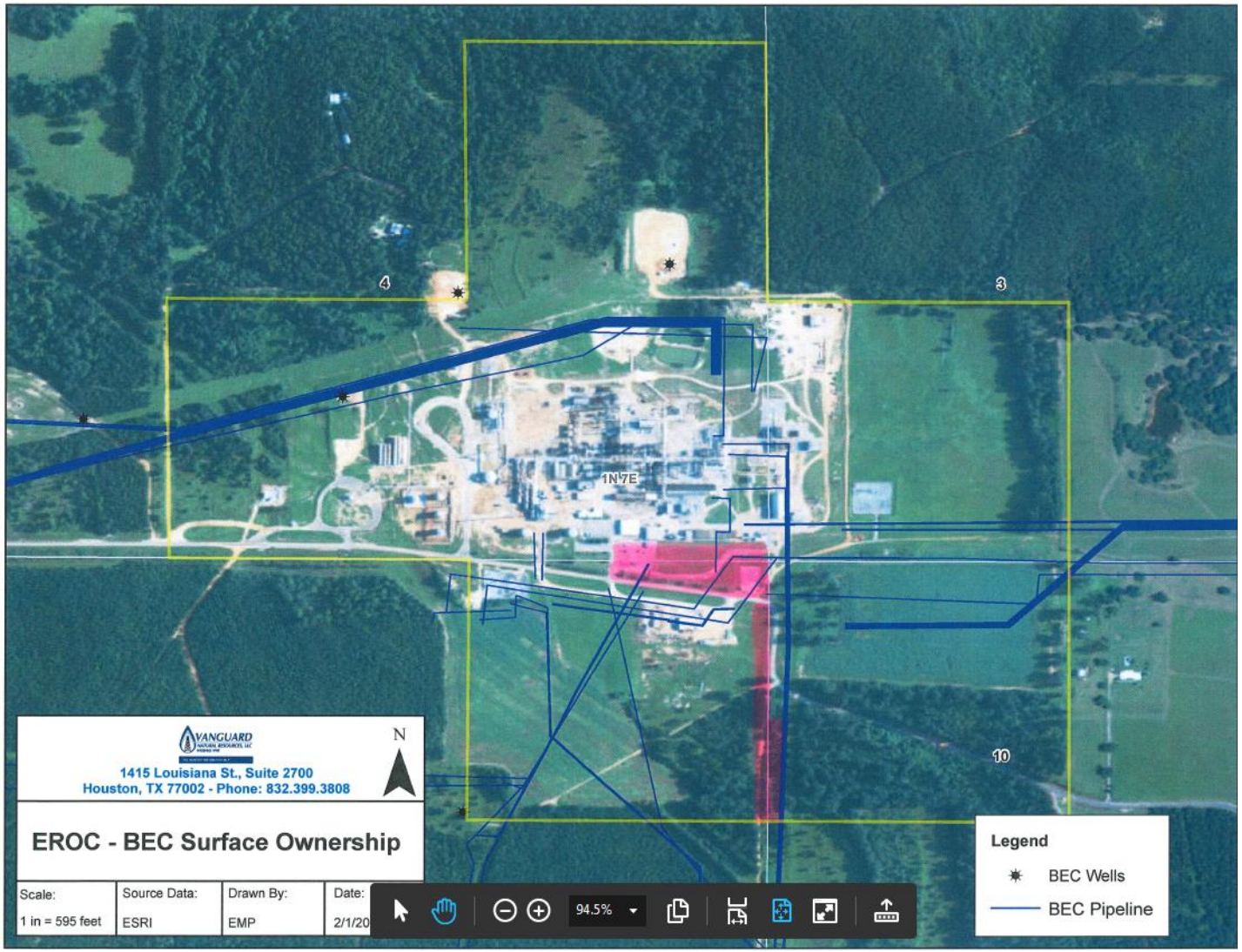

BEC Map with Surface Ownership Boundary and Structure Might Affect Downwash

APPENDIX B

BUILDING DOWNWASH STRUCTURES

TABLE B-1 POLYGON STRUCTURES

Building ID	Tier	Elevation, m	Height, ft	Number of Corners
str-1	1	254.82	12	4
str-2	1	256.07	12	4
str-3	1	256.82	20	4
str-4	1	258.07	12	4
str-5	1	258.76	17	4
str-6	1	259.74	18	4
STR-7	1	261.71	15	4
BLDG-01	1	261.22	20	6
BLDG-02	1	260.56	20	4
BLDG-03	1	260.56	20	4
BLDG-04	1	261.25	25	4
BLDG-05	1	261.29	25	4
BLDG-06	1	261.09	25	4
BLDG-07	1	261.48	25	4
BLDG-08	1	260.99	25	4
BLDG-09	1	260.43	25	6
BLDG-10	1	261.15	25	4
BLDG-11	1	260.47	25	4
BLDG-12	1	258.96	25	4
BLDG-13	1	259.78	25	4
BLDG-14	1	262.73	25	4
BLDG-15	1	262.53	25	6
BLDG-16	1	252.43	25	4
BLDG-17	1	260.27	25	4

TABLE B-2 CIRCULAR STRUCTURES

Building ID	Elevation, m	Height, ft
T101C	260.14	35
T101B	260.79	35
T101A	261.52	28
T-04	263.22	25
T-05	262.89	30
T-06	261.35	20
T-07	261.19	8
T-08	260.79	20
T-09	260.96	20
T-9001	261.02	32

LEGEND

- Stacks
- Property Boundary
- Buildings

0 150 300 600

1:3,600 FEET

REFERENCE(S)

1. PROPERTY BOUNDARY, STACKS, BUILDINGS, GOLDER ASSOCIATES INC., 2017.

COORDINATE SYSTEM: NAD 1983 STATEPLANE ALABAMA WEST FIPS 0102 FEET
PROJECTION: TRANSVERSE MERCATOR
DATUM: NORTH AMERICAN 1983

CLIENT
VANGUARD LLC

PROJECT
BIG ESCAMBIA CREEK PLANT

TITLE
BUILDING DOWNWASH STRUCTURES

CONSULTANT
Golder Associates

YYYY-MM-DD	2017-01-09
DESIGNED	GFD
PREPARED	GFD
REVIEWED	SM
APPROVED	SM

PROJECT NO.	CONTROL	REV.	FIGURE
1667189	A003	0	B-1

PATH: G:\PROJECTS\Vanguard LLC\Big Escambia Creek Plant\99 PROJECTS\1667189 Big Escambia Creek Plant\A Modeling\02 PRODUCTION\MXD\1667189 A003 Buildings Structures.mxd

IF THIS MEASUREMENT DOES NOT MATCH WHAT IS SHOWN, THE SHEET SIZE HAS BEEN MODIFIED FROM: ANSI A
1 in
0

APPENDIX C

CENTREVILLE, ALABAMA, SO_2 MONITORING VALUES

Centrevill, AL SEARCH Monitor - 2013 Hourly SO2 Data (ppb)

	##########	1:00:00 AM	2:00:00 AM	3:00:00 AM	4:00:00 AM	5:00:00 AM	6:00:00 AM	7:00:00 AM	8:00:00 AM	9:00:00 AM	##########	##########	##########	1:00:00 PM	2:00:00 PM	3:00:00 PM	4:00:00 PM	5:00:00 PM	6:00:00 PM	7:00:00 PM	8:00:00 PM	9:00:00 PM	##########	##########
1/1/2013 0:00	0.262207	0.242596	0.202844	0.188474	0.178317	0.15072	0.104475	0.066126	0.051576	0.049404	0.080149	0.096798	0.059421	0.046276	0.048986	0.043048	0.042996	0.041035	0.043887	0.028342	0.031563	0	0.028985	0.026458
1/2/2013 0:00	0.030851	0.041091	0.028404	0.016565	0.034288	0.077427	0.114782	0.122438	0.109661	0.102302	0.132417	0.149572	0.148234	0.139331	0.113846	0.135609	0.169151	0.211813	0.174051	0.140183	0.115379	0.11015	0.113218	0.1099
1/3/2013 0:00	0.110787	0.11276	0.133118	0.11903	0.105148	0.13395	0.144204	0.146281	0.305699	0.588438	0.808599	1.007384	1.129408	1.104117	0.841262	0.710463	0.780306	0.845254	0.841179	1.147295	1.141639	0	0.555651	0.641111
1/4/2013 0:00	0.875525	1.063177	1.060735	0.863853	0.829164	0.823854	0.627921	0.577466	0.734369	1.589748	1.683002	1.599815	1.284379	0.849223	0.756668	0.632149	0.596144	0.534605	0.474286	0.356785	0.328719	0.33376	0.314034	0.287335
1/5/2013 0:00	0.285565	0.43102	0.641069	1.945191	2.535578	4.298417	3.273329	6.90414	7.339211	11.28962	10.94284	9.860466	5.081353	3.40363	6.040562	3.851287	1.491671	0.37481	0.219539	0.142003	0.123305	0.203069	0.216288	0.18317
1/6/2013 0:00	0.141752	0.112032	0.125589	0.126955	0.103466	0.09231	0.105171	0.102348	0.11779	0.147073	0.081194	0.102859	0.087225	0.089127	0.130065	0.305481	0.283719	0.2907	0.313685	0.290733	0.18944	0	0.161897	0.137177
1/7/2013 0:00	0.182101	0.119177	0.062522	0.063367	0.097669	0.442174	0.585233	0.489848	0.607491	0.747843	1.344327	3.927327	3.313997	0.695871	0.607305	0.419736	0.485349	0.522115	0.495993	0.436183	0.383391	0.292712	0.242419	0.250755
1/8/2013 0:00	0.294195	0.42722	0.450221	0.300245	0.284855	0.316099	0.287436	0.328508	0.309733	0.26205	0.273009	0.333511	0.343748	0.323391	0.307434	0.279797	0.254714	0.226486	0.223245	0.252173	0.262572	0	0.316656	0.37818
1/9/2013 0:00	0.505549	0.580364	0.543252	0.395462	0.291684	0.214938	0.172292	0.152459	0.13446	0.112535	0.113348	0.146623	0.14104	0.130024	0.114211	0.09502	0.089518	0.098652	0.094381	0.092932	0.085674	0.049558	0.041586	0.04524
1/10/2013 0:00	0.059366	0.128929	0.187459	0.186618	0.146088	0.162509	0.132729	0.114522	0.088498	0.081046	0.091363	0.098797	0.112494	0.180089	0.196738	0.28984	0.367945	0.366103	0.239653	0.122848	0.103933	0	0.201121	0.242464
1/11/2013 0:00	0.153155	0.09337	0.068523	0.126843	0.164928	0.215729	0.249791	0.364415	0.253693	0.239895	0.122123	0.161256	0.114131	0.134092	0.198679	0.135643	0.126516	0.186429	0.228841	0.138439	0.094592	0.102492	0.105505	0.088641
1/12/2013 0:00	0.072432	0.054106	0.029333	0.01115	0.009988	0.020001	0.010395	0.014053	0.025606	0.063717	0.068863	0.074698	0.065545	0.057172	0.046151	0.045532	0.056532	0.102762	0.161154	0.099274	0.077401	0.067792	0.057092	0.042233
1/13/2013 0:00	0.038082	0.041872	0.043898	0.032935	0.029494	0.026106	0.060755	0.039701	0.056475	0.088608	0.108869	0.111082	0.117977	0.124681	0.107473	0.121957	0.079966	0.067647	0	0	0.059964	0	0.029371	0.023431
1/14/2013 0:00	0.021905	0.0246	0.088247	0.051034	0.027511	0.02333	0.021563	0.014259	0.023265	0.028398	0.05647	0.060183	0.06171	0.068011	0.04152	0.011371	0.018762	0.012217	0.007329	0.006316	0.008454	0.026346	0.035448	0.045262
1/15/2013 0:00	0.026981	0.109917	0.07229	0.064033	0.059699	0.047616	0.038486	0.028504	0.037422	0.069353	0.083333	0.115353	0.122502	0.125958	0.127013	0.11504	0.072804	0.016437	0.010302	0.026025	0.14426	0	0.091509	0.038161
1/16/2013 0:00	0.037564	0.03573	0.113416	0.066303	0.035384	0.034456	0.026843	0.034564	0.061484	0.078125	0.094527	0.110047	0.088402	0.07345	0.050345	0.033127	0.018816	0.012332	0.006767	0.003799	0.010897	0.030535	0.037997	0.038676
1/17/2013 0:00	0.013878	0.071686	0.027654	0.021959	0.039444	0.045549	0.165858	0.09694	0.150172	0.288956	0.597222	0.677909	0.424703	0.287676	0.410006	0.60288	0.702464	0.529255	0.487087	0.412271	0.409567	0	0.46744	0.532695
1/18/2013 0:00	0.608372	0.581507	0.618582	0.560933	0.579158	0.515118	0.470785	0.44036	0.655417	1.037842	1.171489	1.030993	0.90438	0.803073	0.829215	0.706999	0.607794	0.576176	0.560197	4.146804	6.581122	4.96573	3.647105	3.411454
1/19/2013 0:00	3.079159	3.127835	2.15472	1.520657	1.039458	0.61063	0.41555	0.38006	0.475551	0.653469	0.566559	0.596682	0.717396	0.629228	0.612974	0.596858	0.547904	0.511566	0.507099	0.470554	0.420625	0.361171	0.400127	0.304456
1/20/2013 0:00	0.282321	0.301066	0.215247	0.290549	0.137584	0.102304	0.15132	0.186851	0.152614	0.402628	0.671837	0.933356	0.963642	1.013885	0.900678	0.950567	1.02663	0.998729	0.897605	0.862535	0.818505	0	1.054054	0.814794
1/21/2013 0:00	0.823098	0.295353	0.449909	0.375958	0.388594	0.501609	0.403349	0.231589	0.300562	0.593311	0.949174	0.967058	1.100881	1.072839	1.386681	1.600068	1.282098	1.036428	1.017437	1.126491	1.118827	1.03817	0.733383	0.848053
1/22/2013 0:00	0.715956	0.652391	0.507858	0.455252	0.460317	0.391113	0.32894	0.385097	0.911483	1.064186	0.775033	0.633811	0.496067	0.479945	0.383891	0.293481	0.271851	0.341767	0.394829	0.453812	0.419508	0	0.36767	0.508917
1/23/2013 0:00	0.731515	0.236901	0.538683	1.450799	1.195978	0.417434	0.412123	0.470216	0.498758	0.806541	1.185741	1.106092	1.478659	2.701682	3.865988	4.210941	4.352733	4.584423	5.030503	3.131707	2.235498	1.831258	1.861562	1.369972
1/24/2013 0:00	1.763858	3.782597	2.266512	1.101339	0.856885	0.592036	0.596911	0.62952	0.681039	0.926157	1.397014	1.523023	1.392428	1.387324	1.398785	1.303467	1.281501	1.11655	0.882357	1.053805	1.701334	0	5.093848	4.05448
1/25/2013 0:00	2.692214	1.340374	0.971513	1.203624	1.68074	1.686715	1.760418	1.764601	1.735259	1.587099	1.258991	1.013535	0.677117	0.376138	0.364514	0.371644	0.40173	1.22561	1.305432	0.391361	0.192172	0.165497	0.056022	0.044874
1/26/2013 0:00	0.048994	0.072856	0.033737	0.011251	0.018589	0.042497	0.030185	0.133006	0.140578	0.132063	0.16038	0.220669	0.288834	0.282513	0.225877	0.162089	0.134353	0.165091	0.208254	0.219685	0.236325	0.231668	0.210246	0.519965
1/27/2013 0:00	0.585907	0.482257	1.498112	2.903148	4.252238	3.810763	2.381331	1.297608	0.67825	1.090681	1.345881	1.219812	1.239446	1.046215	0.932341	0.946475	1.20291	1.49863	1.549657	1.132721	0.756886	0	0.866944	0.878803
1/28/2013 0:00	0.874825	0.84291	0.833078	0.79159	0.703394	0.826	0.796224	0.700074	0.632192	0.451575	0.411161	0.357836	0	0	0	0	0	0	0	0	0	0.375013	0.902034	0.744032
1/29/2013 0:00	0.673562	0.599383	0.501942	0.353141	0.290622	0.189559	0.086547	0.082871	0.119139	0.158652	0.148798	0.099331	0.085422	0.109964	0.092779	0.159178	0.173441	0.175439	0.194329	0.163526	0.153731	0	0.148152	0.089896
1/30/2013 0:00	0.117682	0.130902	0.217871	0.123805	0.120567	0.109714	0.158428	0.098211	0.084524	0.043332	0.045844	0.062053	0.080372	0.028912	0.054701	1.171259	0.602061	0.241092	0.099796	0.060932	0.061958	0.142391	0.164123	0.148994
1/31/2013 0:00	0.106479	0.205355	0.098943	0.106843	0.11671	0.163695	0.272511	0.263616	0.232632	0.304627	0.310452	0.30934	0.233955	0.223116	0.297457	0.278793	0.241334	0.213438	0.180862	0.127506	0.628407	0	0.680588	2.802286
2/1/2013 0:00	0	1.254278	0.714066	0.500266	0.336509	0.146465	0.099505	0.114658	0.222142	0.289822	0.299301	0.250715	0.175127	0.11435	0.13167	0.141846	0.154607	0.162338	0.123807	0.096437	0.151857	0.196531	0.151234	0.160783
2/2/2013 0:00	0.262803	0.700741	1.392301	1.516296	0.53528	0.328001	0.737762	0.470615	0.575245	0.733649	0.91995	1.019908	1.036531	1.312903	1.922786	2.568926	1.701822	0.590166	0.243479	0.249263	0.268377	0.494347	0.410759	0.436621
2/3/2013 0:00	0.523876	0.623567	0.591757	0.858781	0.529921	0.255782	0.347875	0.41696	0.826583	0.911885	0.679392	0.562118	0.372608	0.258976	0.278949	0.317394	0.234765	0.214191	0.23545	0.2578	0.231465	0	0.350451	0.237642
2/4/2013 0:00	0.218064	0.179808	0.296679	0.215107	0.174551	0.27061	0.251052	0.2573	0.637058	0.721137	0.455186	1.34311	1.035253	0.523013	0.563435	0.674291	0.64586	0.651997	0.674904	0.509172	0.419359	0.386932	0.366558	0.323227
2/5/2013 0:00	0.437556	0.7077	0.691262	1.064739	1.316016	1.366765	1.51067	1.654331	1.207362	0.982371	0.619909	1.099276	3.21982	1.97074	3.051801	2.480986	1.539182	0.532965	0.395321	0.268337	0.2047	0	0.375748	0.186907
2/6/2013 0:00	0.118782	0.051533	0.06984	0.035754	0.119887	0.159038	0.09138	0.301371	0.267856	1.046086	2.857139	3.138503	1.671269	0	0	0.6096	0.466572	0.375661	0.99996	2.710067	3.637793	7.367999	7.446035	2.661499
2/7/2013 0:00	3.181769	1.92904	1.125683	0.66372	0.379458	0.733808	2.086109	1.469291	1.402373	1.743785	1.861781	1.3051	1.112685	1.413859	1.445795	1.608164	2.155864	1.7896	1.757823	1.020682	1.006288	0	1.009579	0.552338
2/8/2013 0:00	0.720595	1.259605	1.103716	0.679121	0.518135	0.333671	0.225878	0.155914	0.169906	0.226751	0.808989	0.709913	0.316523	0.16515	0.19626	0.12843	0.200974	0.1737	0.206518	0.111476	0.175416	0.17597	0.122515	0.245118
2/9/2013 0:00	0.287272	0.302336	0.712113	0.806325	0.745783	1.002971	1.017983	0.648528	0.706131	0.775721	1.669024	3.330071	3.230776	0	0	0	0	0	0	0	0	0	0	0
2/10/2013 0:00	0	0	0	0	0	0	0	0	0	0	0	0	0	0	0	0	0	0	0	0	0	0	0	0
2/11/2013 0:00	0	0	0	0	0	0	0	0	0	0	0	0	0	0	0	0	0	0	0	0	0	0	0	0
2/12/2013 0:00	0	0	0	0	0	0	0	0	0	0	0	0	0	0	0	0	0	0	0	0	0	0	0	0
2/13/2013 0:00	0	0	0	0	0	0	0	0	0	0	0	0	0	0	0	0	0	0	0	0	0	0	0	0
2/14/2013 0:00	0	0	0	0	0	0	0	0	0	0	0	0	0	0	0	0	0	0	0	0	0	0	0	0
2/15/2013 0:00	0	0	0	0	0	0	0	0	0	0	0	0	0	0.478923	0.52199	0.505449	0.44201	0.308686	0.347873	0.410681	0.280583	0.315764	0.316819	0.246006
2/16/2013 0:00	0.171366	0.127613	0.221336	0.156916	0.143062	0.075616	0.111817	0.12471	0.160013	0.319422	0.378036	0.276198	0.293798	0.397503	0.356451	0.258232	0.167243	0.123538	0.161889	0.240502	0.222504	0.304809	0.210815	0.171189
2/17/2013 0:00	0	0.191076	0.157347	0.233233	0.089813	0.167643	0.362417	0.283864	0.371292	0.574645	0.301692	0.222427	0.187457	0.23317	0.290885	0.271184	0	0.77095	0.984452	0.665379	0.557172	0	0.37358	0.377451
2/18/2013 0:00	0.393739	0.287468	0.474458	0.378759	0.461404	0.516962	0.333171	0.591399	0.601258	0.587393	0.453057	0.275335	0.343835	0.355791	0.468552	0.347903	0.349041	0.346495	0.35495	0.221407	0.218667	0.271638	0.288666	0.287294
2/19/2013 0:00	0.207043	0.23631	0.124133	0.152862	0.152561	0.137559	0.093313	0.168439	0.10317	0	0.141613	0.219987	0.21681	0.244287	0.173905	0.210779	0.09978	0.046811	0.042337	0.125048	0.129792	0	0.185583	0.070234
2/20/2013 0:00	0.089087	0.076842	0.124227	0.107742	0.118382	0.173024	0.126807	0.158367	0.25722	0.684133	0.569953	0.29071	0.294744	0.284676	0.390452	0.424722	0.435157	0.491662	0.408326	0.447159	0.283513	0.246246	0.098648	0.308174
2/21/2013 0:00	0.364414	0.85072	0.740411	0.852238	0.747463	0.707562	1.699152	9.020979	9.06673	2.635637	1.172286	0.322595	0.335626	0.429528	1.240903	1.391692	1.437099	1.406369	0.874482	0.522346	0.416761	0	0.211789	0.106699
2/22/2013 0:00	0.105858	0.058175	0.110005	0.085662	0.131578	0.109046	0.122743	0.134249	0.084304	0.157018	0.143984	0.14062	0.182534	0.152028	0.105883	0.13357	0.166298	0.369207	0.250078	0.329188	0.497322	0.295233	0.355684	0.51041
2/23/2013 0:00	0.440063	0.370457	0.340339	0.332504	0.30694	0.21047	0.182249	0.171395	0.222148	0.275366	0.240408	0.259257	0.295726	0.236495	0.146736	0.117368	0.062579	0.108922	0.094274	0.051204	0.070087	0.0843	0.118501	0.151085
2/24/2013 0:00	0.157195	0.250426	0.121804	0.149152	0.138305	0.160994	0.17177	0.239522	0.62422	2.523814	3.49928	0.557036	1.343921	0.550818	0.551542	0.740487	0	0	0	0.751641	3.586955	0	5.234759	2.771109
2/25/2013 0:00	2.071248	0.800341	0.8516	0.822245	0.864308	0.844487	0.397308	0.220598	0.221021	0.194348	0.188199	0.160733	0.168389	0.145343	0.115115	0.103442	0.057394	0.078845	0.087318	0.074527	0.070412	0.077284	0.027923	0.048522
2/26/2013 0:00	0.043525	0.096943	0.037224	0.050666	0.050947	0.076404	0.101074	0.099989	0.106214	0.118365	0.092236	0.028291	0.048047	0.662592	0.7519	0.037869	0.052724	0.091629	0.042112	0.008811	0.02029	0	0.100998	0.06941
2/27/2013 0:00	0.06146	0.045557	0.121279	0.096	0.07788	0.095949	0.072741	0.029939	0.036939	0.120861	0.202684	0.218628	0.270633	0.265375	0.528346	1.532372	0.225675	0.196203	0.203919	0.200059	0.169019	0.269894	0.192988	0.266088
2/28/2013 0:00	0.183731	0.219627	0.137239	0.131541	0.137211	0.145181	0.171741	0.213436	0.153543	0.111087	0.163046	0.177565	0.195993	0.181714	0.119251	0.113754	0.128696	0.085159	0.068338	0.063832	0.057976	0	0.109847	0.071021
12/1/2013 0:00	0.089742	0.267361	0.230817	0.070411	0.118416	0.193253	0.333948	0.269463	0.282977	0.666948	1.032271	1.414351	1.47642	1.355912	1.12471	1.033606	0.902452	1.116033	2.459322	3.510433	2.456827	0	0.573461	0.343663
12/2/2013 0:00	0.322981	0.258177	0.12809	0.156484	0.150569	0.033062	-0.0089	0.131177	0.123209	0.305355	0.509942	0.580693	0.437658	0.403718	0.471911	0.391929	0.346407	0.264277	0.30845	0.23014	0.312772	0.292302	0.397967	0.231796
12/3/2013 0:00	0.300773	0.220769	0.228877	0.242519	0.226365	0.278957	0.277439	0.159656	0.073431	0.085599	0.101824	0.08086	0.071681	0.183801	0.233716	0.201051	0.153077	0.177058	0.161485	0.181781	0.187136	0	0.165929	0.110863
12/4/2013 0:00	0	0	0	0	0	0	0	0	0	0	0	0	0	0.247495	0.267478	0.179777	0.152011	0.167509	0.167509	0.078519	0.097105	0.056404	0.050823	0.101758

Centrevill, AL SEARCH Monitor - 2013 Hourly SO2 Data (ppb)

	##########	1:00:00 AM	2:00:00 AM	3:00:00 AM	4:00:00 AM	5:00:00 AM	6:00:00 AM	7:00:00 AM	8:00:00 AM	9:00:00 AM	##########	##########	##########	1:00:00 PM	2:00:00 PM	3:00:00 PM	4:00:00 PM	5:00:00 PM	6:00:00 PM	7:00:00 PM	8:00:00 PM	9:00:00 PM	##########	##########
12/5/2013 0:00	0.080758	0.110544	0.115257	0.109511	0.168149	0.122636	0.165451	0.153095	0.129122	0.14029	0.124212	0.114846	0.136206	0.135471	0.08399	0.088172	0.126646	0.130321	0.129367	0.092183	0.087761	0	0.107125	0.103605
12/6/2013 0:00	0.081543	0.132628	0.139669	0.154465	0.134444	0.074111	0.074567	0.103378	0.093407	0.156985	0.157757	0.14604	0.129214	0.119829	0.095386	0.64213	0.270956	0.158637	0.184377	0.103292	0.137295	0.139287	0.164916	0.075716
12/7/2013 0:00	0.088677	0.11778	0.153597	0.225358	0.273067	0.30621	0.297914	0.32705	0.311034	0.370395	0.24642	0.225836	0.244623	0.229017	0.157492	0.230086	0.162818	0.175664	0.167127	0.154372	0.159508	0.187921	0.207601	0.222952
12/8/2013 0:00	0.282024	0.275895	0.339803	0.430831	0.29861	0.267161	0.246184	0.216271	0.196703	0.208143	0.169071	0.205366	0.140725	0.176536	0.107512	0.106316	0.109382	0.023463	0.020806	0.051213	0.114011	0	0.168287	0.119848
12/9/2013 0:00	0.151274	0.377875	0.290352	0.138842	0.051918	0.035931	0.08684	0.078972	0.07354	0.065911	0.062609	0.065857	0.044767	0.03107	0.019006	0.053526	0.05166	0.018828	0.018828	0.029695	-0.00507	0.032024	0.034913	0.05757
12/10/2013 0:00	-0.02346	-0.00711	0.045978	0.041125	0.079099	0.087182	0.047672	0.132189	0.109562	0.137978	0.091831	0	0	0.53108	0.593046	0.57414	0.485533	0.270048	0.20086	0.199945	0.145864	0	0.211587	0.319898
12/11/2013 0:00	0.468114	0.276399	0.188104	0.10709	0.135955	0.243499	0.225385	0.609345	0.679703	1.054538	2.064415	2.713164	2.137785	1.5718	1.689366	1.757567	0.943417	0.908638	0.709693	0.220199	0.269016	0.321748	0.290665	0.477318
12/12/2013 0:00	0.345122	0.266034	0.230235	0.207669	0.154152	0.07303	0.071749	0.117271	0.225018	0.382648	0.567046	0.559236	0.738056	0.706398	0.623462	0.476821	0.451138	0.51408	0.473099	0.425968	0.421272	0	0.385693	0.494897
12/13/2013 0:00	0.597472	0.740126	0.7235	1.266334	5.394289	2.630248	1.753888	1.961155	2.377649	1.326598	0.886698	0.765279	0.710734	0.746483	0.710039	0.670679	0.658942	0.543151	0.453163	0.412	0.474066	0.651218	0.685123	0.511089
12/14/2013 0:00	0.521325	0.771492	1.166142	0.494882	0.172216	0.130706	0.10268	0.047156	0.025616	0.096626	0.041262	1.065141	0.913047	0.245134	0.247708	0.182711	0.14642	0.155106	0.165202	0.16314	0.135978	0.146652	0.107212	0.132656
12/15/2013 0:00	0.19081	0.187415	0.148814	0.155121	0.21204	0.168528	0.184017	0.170723	0.199532	0.193219	0.176516	0.182855	0.226857	0.257871	0.175872	0.170622	0.145155	0.122827	0.113531	0.1757	0.066127	0	0.106983	0.111639
12/16/2013 0:00	0.097365	0.015139	0.083832	0.098885	0.13606	0.117066	0.118192	0.160573	0.19866	0.222811	0.772903	0.502048	0.411572	0.331992	0.270485	0.243617	0.178891	3.340463	7.111672	3.51876	2.00999	0.874618	0.530223	0.398545
12/17/2013 0:00	0.331037	0.380596	0.380085	0.591629	0.479886	0.378127	0.350761	0.409702	0.559258	0.821973	0.899	0.636916	1.115439	2.959314	3.449807	2.554509	1.239437	0.696867	0.630895	0.669193	0.677338	0	0.710854	0.593496
12/18/2013 0:00	0.431313	0.228892	0.216182	0.278098	0.304576	0.347714	0.237378	0.285532	0.46628	0.656042	0.848254	0.875557	0.73388	0.699656	0.713432	0.605366	0.617043	0.605592	0.5823	0.521543	0.478898	0.44703	0.498481	0.724131
12/19/2013 0:00	0.768416	0.870859	0.710515	0.483416	0.432002	0.274349	0.233163	0.659894	0.637048	0.556011	0.524539	0.600702	0.49416	0.617952	0.625377	0.456686	0.539152	0.668914	0	0.860441	0.984486	0	0.464391	0.303445
12/20/2013 0:00	0.194337	0.242747	0.286889	0.339577	0.360401	0.24079	0.285134	0.299129	0.199241	0.297393	0.397402	0.279431	0.230745	0.240104	0.253713	0.346676	0.471104	0.346168	0.315921	0.362186	0.360629	0.330373	0.294022	0.213207
12/21/2013 0:00	0.199499	0.23956	0.18191	0.150027	0.145406	0.053026	0.079859	0.06888	0.089674	0.110977	0.090835	0.173136	0.14446	0.134507	0.192291	0.211011	0.164864	0.130798	0.157016	0.134761	0.146209	0.174722	0.103817	0.180468
12/22/2013 0:00	0.101297	0.042659	0.143363	0.089861	0.041581	0.05778	0.092694	0.041639	0.140426	0.05719	0.079044	0.070618	0.097188	0.137252	0.122072	0.139167	0.126999	0.098966	0.071904	0.084921	0.101615	0	0.08716	0.103993
12/23/2013 0:00	0.131108	0.015389	0.13856	0.089763	0.142856	0.175889	0.110927	0.101562	0.15024	0.085445	0.15751	0.152562	0.085498	0.092952	0.046879	0.055227	0.083484	0.112409	0.086159	0.118845	0.14992	0.199736	0.076651	0.018991
12/24/2013 0:00	0.072902	0.058804	0.046847	0.06084	0.028193	0.033785	0.045576	0.105271	0.275557	0.488109	0.452049	0.516497	0.598267	0.509853	0.51011	0.501135	0.377671	0.193924	0.230186	0.259278	0.267966	0	0.21093	0.133787
12/25/2013 0:00	0.192267	0.308467	0.504421	0.522617	0.301788	0.350797	0.288759	0.367118	1.244194	2.565194	2.23866	1.293376	0.784985	0.467407	0.37327	0.435584	0.355684	0.502195	0.546304	0.676013	0.958148	0.397989	0.528971	0.711233
12/26/2013 0:00	0.536312	0.563078	0.369357	0.252043	0.349033	0.337737	0.382633	0.310374	0.537226	1.015176	1.167707	1.606168	1.076919	0.771159	0.684309	0.555774	0.46784	0.420432	0.376239	0.429458	0.462332	0	0.615135	0.451744
12/27/2013 0:00	0.32128	1.225547	1.720674	1.970914	1.761936	1.121246	0.786989	0.517578	0.723803	0.863933	0.875098	0.931044	0	0	0	0	0	0	0	0	0	0	0	0
12/28/2013 0:00	1.258037	1.922553	1.454003	0.703832	0.422366	0.286728	0.104354	0.226031	0.090539	0.022446	-0.01766	0	-0.00588	0.02159	0.049509	0.08426	0.116904	0.02488	0.042005	0.052441	0.037789	0.06241	0.068733	0.099381
12/29/2013 0:00	0.147482	0.160956	0.161805	0.180544	0.133119	0.208769	0.206514	0.221508	0.20738	0.238621	0.224658	0.166457	0.251914	0.342896	0.391402	0.354671	0.33271	0.197202	0.164517	0.138169	-0.00184	0	0.146317	0.032113
12/30/2013 0:00	0.099953	0.106193	0.083616	0.108044	0.139966	0.187465	0.134757	0.152114	0.186599	0.228599	0.274841	0.622762	0.498177	0.371422	0.364065	0.279088	0.189853	0.122844	0.127251	0.121889	0.063045	0.02678	0.071838	0.083657
12/31/2013 0:00	0.150416	0.108474	0.110955	0.20822	0.12817	0.017023	0.056412	0.027462	0.074336	0.018724	0.122529	0.115685	0.163349	0	0.183878	0.17772	0.102925	0.057354	0.105254	0.152463	0.28581	0	0.338469	0.386493
2nd Highest =	**3.08**	**3.13**	**2.15**	**1.97**	**4.25**	**3.81**	**2.38**	**6.90**	**7.34**	**2.64**	**3.50**	**3.93**	**3.31**	**2.96**	**3.87**	**3.85**	**2.16**	**3.34**	**5.03**	**3.52**	**3.64**	**4.97**	**5.23**	**3.41**
3/1/2013 0:00	0.093268	0.13619	0.212913	0.123337	0.03278	0.019671	0.021807	0.020227	0.102729	0.090426	0.135913	0.219487	0.51864	0.286827	0.200851	0.285914	0.108511	0.034533	0.02367	0.052773	0.089695	0.12127	0.083023	0.11049
3/2/2013 0:00	0.190106	0.106585	0.183455	0.177983	0.203025	0.183463	0.169049	0.166758	0.189256	0.229495	0.174775	0.148316	0.149338	0.147568	0.121854	0.15014	0.201964	0.22623	0.22307	0.312686	0.313695	0.289301	0.358861	0.321343
3/3/2013 0:00	0.3392	0.342399	0.189642	0.181238	0.173846	0.096091	0	0.342958	0.724639	0.625934	0.603024	0.806865	0.928535	0.562358	0.376134	0.313434	0.286106	0.243657	0.203136	0.247874	0.258508	0	0.499008	0.726585
3/4/2013 0:00	0.46845	0.412122	0.284047	0.153674	0.103344	0.118159	0.119744	0.216332	0.855704	0.96665	0.872514	0.809311	0.986934	1.552299	1.245279	1.59113	1.226874	1.101652	0.841329	0.489439	0.483829	0.540301	0.477196	0.337613
3/5/2013 0:00	0.369385	0.340829	0.239445	0.32275	0.406703	0.524701	0.576668	0.483449	0	0.706356	0	0.490952	0.413121	0.2098	0.07829	0.08337	0.070305	0.082798	0.053703	0	0.210079	0	0.123424	0.143963
3/6/2013 0:00	0.240732	0.288788	0.223259	0.194216	0.139514	0.098907	0.135663	0.143766	0.115803	0.131899	0.108543	0.132502	0.197771	0.213511	0.200724	0.208312	0.147903	0.116033	0.131786	0.169403	0.167862	0.236951	0.190199	0.228253
3/7/2013 0:00	0.251443	0.160643	0.194735	0.220921	0.255823	0.245559	0.179325	0.181931	0.302622	0.625335	0.438624	0.31024	0.511609	3.959407	2.61121	1.561135	1.220061	1.080312	0.066482	0.026339	0.047901	0	0.054381	0.058248
3/8/2013 0:00	0.047525	0.045503	0.155116	0.108107	0.074328	0.045489	0.067124	0.151969	0.161095	0.19048	0.187507	0.193928	0.138557	0.106364	0.131163	0.086017	0.125945	0.130122	0.183817	0.397302	0.514915	1.879668	4.943718	5.687479
3/9/2013 0:00	2.353343	2.690609	3.677547	2.548056	2.179986	0.960837	0.718786	0.747749	1.031301	1.49508	1.481924	1.226668	0.93135	1.114998	1.167739	0.924308	0.884916	0.75543	0.71491	0.881029	0.72849	1.034193	1.141986	1.047238
3/10/2013 0:00	0.964207	0.80594	0.983919	1.119532	1.381054	1.80248	1.467702	1.262247	1.053736	1.006974	0.902776	0.755128	0.626801	0.547914	0.44124	0.205721	0.157685	0.154663	0.193556	0.195278	0.233943	0	0.272052	0.240748
3/11/2013 0:00	0.17639	0.20039	0.150673	0.098118	0.138775	0.082677	0.095797	0.078516	0.05462	0.039394	0.031942	0.026442	0.037075	0.037505	0.029467	0.026812	0.04309	0.040219	0.053211	0.025806	0.035471	0.014627	0.04109	0.081901
3/12/2013 0:00	0.070294	0.074983	0.05114	0.059635	0.043827	0.069206	0.055062	0.0922	0.197026	0.237687	0.25434	0.331847	0.824926	0	0	0.542222	0.420567	0.324199	0.223787	0.148484	0.106299	0	0.358871	0.314819
3/13/2013 0:00	1.150435	1.471978	0.806572	0.639965	0.793151	0.75285	0.488969	0.386205	0.392683	0.250141	0.225284	0.226603	0.224942	0.220805	0.169072	0.180518	0.200232	0.140383	0.151307	0.165105	0.150382	0.135926	0.146144	0.259701
3/14/2013 0:00	0.207342	0.165241	0.206059	0.171418	0.147864	0.217476	0.182466	0.427542	0.566091	0.40387	0.393747	0.326452	0.23217	0.208155	0.238883	0.818339	1.2053	0.509002	0.323849	0.221431	0.360454	0	4.090425	4.148251
3/15/2013 0:00	3.509098	2.335702	2.462143	2.322916	1.891972	1.050905	0.902513	2.014375	1.921182	1.394069	1.223984	2.619636	2.509839	3.666739	2.60768	2.433328	2.299158	1.785374	1.111286	1.274693	1.209956	1.600268	1.867743	2.426149
3/16/2013 0:00	2.310798	2.398862	2.347249	2.18298	1.900041	1.651947	1.479662	3.610913	4.64171	3.820567	4.474259	3.546253	1.534128	1.22458	0.937288	0.813077	0.537143	0.399975	0.465449	0.441382	0.484052	0.532877	0.445524	0.482439
3/17/2013 0:00	0.518887	0.537534	0.354403	0.315594	0.375135	0.3552	0.295943	0.310374	0.501383	0.638483	0.575917	0.35442	0.345464	0.661618	0.241075	0.227086	0.213816	0.23441	0.2884	0.205898	0.203504	0	0.213	0.138234
3/18/2013 0:00	0.129602	0.082582	0.055135	0.043134	0.046656	0.014658	0.046637	0.026287	0.053236	0.055419	0.103504	0.188012	0.155101	0.117224	1.86255	0.080698	0.037965	0.017294	0.059926	0.033882	0.019181	0.015947	0.007429	0.027558
3/19/2013 0:00	0.011737	0.053046	0.168314	0.080166	0.168846	0.142904	0.194938	0.373949	0.390373	0	0.464283	0.184087	0.592235	0.146326	0.232847	0.201187	0.195289	0.309185	0.321111	0.255669	0.25122	0	0.234917	0.441985
3/20/2013 0:00	0.924768	0.666864	0.450536	0.338553	0.497876	2.069533	2.34149	1.526687	1.206771	1.343288	0.618951	0.661266	0.503822	0.371263	0.384402	0.385745	0.212326	0.174335	0.182844	0.303312	0.185757	0.146947	0.163152	0.190868
3/21/2013 0:00	0.20792	0.194448	0.347558	0.313004	0.231751	0.284052	0.275427	0.296187	0.483427	0.573806	0.556211	0.557395	0.527416	0.455074	0.392363	0.359821	0.386071	0.338712	0.357233	0.284427	0.344387	0	0.236384	0.256496
3/22/2013 0:00	0.640303	1.552694	2.004936	2.154812	7.337049	0.623305	0.362043	0.23846	0.171391	0.131128	0	0.121262	0.109739	0.089562	0.056565	0.042246	0.068249	0.078451	0.085578	0.072423	0.044159	0.045995	0.051516	0.085773
3/23/2013 0:00	0.169951	0.237925	0.23942	0.31775	0.194847	0.201425	0.150393	0.333584	0.813691	1.181084	0.679871	0.349043	0.240926	0.154779	0.14215	0.127827	0.155872	0.175339	0.155746	0.110416	0.09797	0.111394	0.057346	0.038867
3/24/2013 0:00	0.139671	0.190927	0.10804	0.100174	0.07734	0.087234	0.205701	0.147685	0.115996	0.133924	0.160258	0.118872	0.114739	0.033021	0.040507	0.089361	0.111832	0.082384	0.084122	0.114614	0.292759	0	0.018388	0.042321
3/25/2013 0:00	0.016962	0.048753	0.071544	0.159696	0.114811	0.102941	0.109081	0.111627	0.049936	0.101751	0.133032	0.072364	0.064775	0.039276	0.010083	0.070336	0.059684	0.076001	0.118464	0.088383	0.181543	0.124461	0.054043	0.215238
3/26/2013 0:00	0.255141	0.285179	0.316875	0.245186	0.276411	0.221209	0.201208	0.216327	0.24238	0.159043	0.147965	0.131101	0.109449	0.149709	0.129628	0.12692	0.118491	0.103059	0.113211	0.116134	0.116338	0	0.069965	0.040835
3/27/2013 0:00	0.043543	0.050946	0.086713	0.15187	0.116273	0.0864	0.141442	0.208216	0.196777	0	0	0.216119	0.267894	0.183261	0.147185	0.182588	0.318257	0.431062	0.390117	0.493271	0.254174	0.199539	0.239607	0.23008
3/28/2013 0:00	0	0.177893	0.241372	0.15396	0.109875	0.105106	0.069442	0.18896	1.407179	1.254279	0.898653	0.657804	0.648433	0.574361	0.434443	0.43908	0.488773	0.59871	0.717239	0.575446	0.563474	0	1.888648	0.476926
3/29/2013 0:00	0.378599	0.240233	0.204601	0.347035	0.109315	0.193363	0.500938	0.864363	1.240036	0	0	0	0	0	0	0	0	1.537019	1.87989	1.05426	0.919215	0.833095	0.772382	0.883925
3/30/2013 0:00	0.756291	0.824257	0.851584	0.721883	0.604752	0.626188	0.556083	0.688353	2.853613	2.43237	2.011376	2.361806	2.435966	1.425573	0.551062	0.364742	0.397405	0.376789	0.305733	0.25226	0.244525	0.236843	0.228596	0.25088
3/31/2013 0:00	0.23145	0.275497	0.329288	0.481177	0.689769	1.040732	0.641045	0.704039	0.478041	0.217617	0.278568	0.246361	0.138095	0.097654	0.067837	0.106516	0.082095	0.261047	0.731709	0.418278	0.621927	0	0.278514	0.14943
4/1/2013 0:00	0.114931	0.105173	0.103962	0.078009	0.079174	0.051385	0.045835	0.048606	0.081399	0.117861	0.170867	0.224718	0.21961	0.216337	0.251894	0.222133	0.188126	0.185863	0.246703	0.154969	0.28364	0.583636	0.333751	0.439611
4/2/2013 0:00	0.555593	0.630935	0.712533	0.748754	0.966257	0.596358	0.724933	1.562822	1.359843	0	0	0.798971	0.778531	0	0.474996	0.526413	0.723164	0.487489	0.551739	0.594802	0.335345	0	0.45118	0.723873

Centrevill, AL SEARCH Monitor - 2013 Hourly SO2 Data (ppb)

	##########	1:00:00 AM	2:00:00 AM	3:00:00 AM	4:00:00 AM	5:00:00 AM	6:00:00 AM	7:00:00 AM	8:00:00 AM	9:00:00 AM	##########	##########	##########	1:00:00 PM	2:00:00 PM	3:00:00 PM	4:00:00 PM	5:00:00 PM	6:00:00 PM	7:00:00 PM	8:00:00 PM	9:00:00 PM	##########	##########
4/3/2013 0:00	1.005473	1.656232	1.520818	1.266748	0.88102	1.124602	1.086412	0.871669	1.451875	3.51501	4.497145	3.22219	0	3.688357	2.177414	0.523064	0.350722	0.279198	0.20344	0.187896	0.520799	1.868192	1.347235	0.405308
4/4/2013 0:00	0.177437	0.145416	0.134742	0.149168	0.119486	0.089506	0.098557	0.100332	0.049866	0.053693	0.059289	0.034463	0.035218	0.056238	0.021644	0.064351	0.08659	0.068203	0.049847	0.069954	0.045993	0	0.30286	0.307082
4/5/2013 0:00	0.314013	0.171908	0.130763	0.186133	0.072765	0.111645	0.102842	0.082615	0.128653	0	0.276459	0.298905	0.293058	0.201876	0.184131	0.15452	0.114491	0.346946	0.561775	0.683934	0.907567	1.464743	1.736498	1.409441
4/6/2013 0:00	1.217932	1.982465	1.732243	1.290125	1.950839	0.520907	0.688122	1.834803	2.08266	1.26763	1.180458	1.19418	1.48494	0.146901	0.100878	0.127322	0.118303	0.094527	0.144822	0.152557	0.131508	0.165726	0.140326	0.151051
4/7/2013 0:00	0.093945	0.095858	0.061449	0.042579	0.060469	0.084139	0.049017	0.138927	0.143055	0.110805	0.119357	0.121567	0.116012	0.115918	0.118378	0.127978	0.095961	0.051605	0.013169	0.037898	0.075337	0	0.12202	0.119735
4/8/2013 0:00	0.126419	0.13251	0.154639	0.09651	0.101362	0.160589	0.155689	0.124189	0.052302	0.135389	0	0.126702	0.110503	0.137464	0.119617	0.108126	0.135026	0.139084	0.124794	0.085445	0.067123	0.092121	0.095483	0.123274
4/9/2013 0:00	0	0	0	0.179464	0.110908	0.074195	0.074644	0.056373	0.059899	0.0837	0.115273	0.101489	0	0	0.206703	0.099873	0.141373	0.097243	0.124059	0.14192	0.121841	0	0.184102	0.124786
4/10/2013 0:00	0.07666	0.081219	0.070942	0.091416	0.085324	0.072571	0.064709	0.063379	0.101817	0.153407	0.19773	0.393902	0.355518	0.285547	0.299077	0.176517	0.241223	0.163954	0.13774	0.151842	0.091055	0.140158	0.156887	0.126715
4/11/2013 0:00	0.132239	0.124967	0.150419	0.112873	0.152662	0.131432	0.129249	0.139003	0.089387	0.062395	0.043158	0.063463	0.081828	0.097107	0.08686	0.057935	0.067844	0.076616	0.077886	0.05781	0.102265	0	0.144734	0.106966
4/12/2013 0:00	0.058347	0.03401	0.034242	0.066789	0.073721	0.08122	0.061889	0.039085	0.059332	0.114511	0.110057	0.314391	0.339439	0.260737	0.197093	0.192327	0.190273	0.17788	0.17948	0.245168	0.270804	0.253995	0.134161	0.121197
4/13/2013 0:00	0.115214	0.158261	0.130705	0.084174	0.069109	0.020643	0.056036	0.086803	0.408431	0.876295	0.633318	0.379728	0.308572	0.228557	0.208067	0.196486	0.199349	0.253388	0.250202	0.196025	0.260316	0.306984	0.299266	0.388755
4/14/2013 0:00	0.257038	0.156217	0.183326	0.15281	0.187778	0.159448	0.126994	0.084675	0.066396	0.109636	0.093622	0.091326	0.120725	0.095462	0.105026	0.086878	0.112394	0.052749	0.054779	0.062309	0.014296	0	0.047761	0.04952
4/15/2013 0:00	0.013048	0.019762	0.033368	0.055842	0.06896	0.101278	0.074621	0.058239	0.006465	0	0.28703	0.263331	0.264115	0.198095	0.199069	0.186989	0.226252	0.242843	0.204805	0.119883	0.122397	0.101199	0.066792	0.086999
4/16/2013 0:00	0.101101	0.104223	0.107618	0.109056	0.129785	0.150718	0.118452	0.232737	0.28073	0.391518	0.453268	0.439456	0.319379	0.313176	0.224766	0.158468	0.176782	0.223016	0.252697	0.232766	0.147843	0	0.173159	0.153442
4/17/2013 0:00	0.184125	0.166916	0.102319	0.050931	0.074062	0.080214	0.100222	0.085593	0.222463	0.567687	0.714644	0.541575	0.388463	0.23962	0.238064	0.165585	0.214594	0.221299	0.127852	0.125566	0.12452	0.212	0.220106	0.16143
4/18/2013 0:00	0.155881	0.137554	0.12553	0.11903	0.082294	0.060018	0.133098	0.155585	0.119557	0.174052	0.219532	0.309303	0.276236	0.220055	0.16642	0.094658	0.057762	0.068242	0.071481	0.072834	0.025286	0	0.021859	0.058873
4/19/2013 0:00	0.018958	0.061005	0.036031	0.026335	0.044538	0.012917	0.006272	0.040028	0.065246	0.091489	0.064946	0.088134	0.062216	0.07937	0.061632	0.061309	0.047965	0.089658	0.077749	0.07185	0.081237	0.095626	0.06233	0.046656
4/20/2013 0:00	0.040571	0.037901	0.041632	0.069701	0.059457	0.078879	0.055133	0.086603	0.077306	0.291968	0.17073	0.207127	0.289465	0.321184	0.30035	0.265557	0.234593	0.2244	0.197136	0.104054	0.119506	0.107856	0.155854	0.192477
4/21/2013 0:00	0.135071	0.123369	0.085933	0.035037	0.077676	0.166	0.190756	0.854442	1.300534	0.717664	0.460812	0.295732	0.26843	0.280608	0.228438	0.236357	0.216701	0.194904	0.161041	0.200469	0.247178	0	0.217082	0.195634
4/22/2013 0:00	0.176497	0.157576	0.118825	0.087213	0.109236	0.276487	0.373719	0.287358	0.294082	0	0	0.11561	0.113088	0	0.388219	0.530744	0.400987	0.552705	0.565604	0.509232	0.406327	0.291173	0.494706	0.491146
4/23/2013 0:00	0.474783	0.470404	0.384273	0.289998	0.245485	0.207615	0.222489	0.325649	0.457318	0.493537	0.570174	0.350809	0.19346	0.175827	0.191258	0.164403	0.168629	0.104094	0.136423	0.091477	0.117891	0	0.106218	0.101596
4/24/2013 0:00	0.1538	0.215572	0.27129	0.215798	0.305952	0.264116	0.181631	0.133888	0.12821	0.134854	0.116256	0.111286	0.150016	0.159534	0.173161	0.115129	0.09217	0.062489	0.057705	0.085181	0.112214	0.143249	0.117158	0.137778
4/25/2013 0:00	0.109061	0.082846	0.064195	0.055342	0.085219	0.098282	0.162392	0.193955	0.177745	0.172656	0.189514	0.163358	0.179431	0.254723	0.338161	0.312902	0.33552	0.322904	0.280239	0.246526	0.265507	0	0.189698	0.228064
4/26/2013 0:00	0.30998	0.502372	0.514316	0.33754	0.285994	0.409677	0.35809	1.031046	1.924797	1.840544	0.80904	0.336033	0.184386	0.275036	0.200041	0.252817	0.443104	0.731337	0.812129	0.544182	0.876937	0.600595	0.617649	0.31231
4/27/2013 0:00	0.290456	0.435557	0.376206	0.35299	0.311518	0.32474	0.227905	0.64386	1.000339	2.31871	1.258235	0.799299	0.67207	0.721587	0.574536	0.403591	0.424127	0.35844	0.428687	0.465271	0.450858	0.334163	0.267861	0.160528
4/28/2013 0:00	0.155989	0.19835	0.207878	0.23942	0.255015	0.214499	0.162911	0.187214	0.219079	0.268842	0.148748	0.147268	0.119102	0.119124	0.147221	0.250964	0.175568	1.029128	0.441749	0.159128	0.25478	0	1.072176	1.355944
4/29/2013 0:00	0.687211	1.198726	2.546646	1.718714	0.860714	0.563229	0.560603	0.408269	0.260979	0.156261	0.13956	0.15018	0.145151	0.172367	0.143794	0.103933	0.135405	0.110412	0.13382	0.130321	0.152837	0.134809	0.187113	0.157799
4/30/2013 0:00	0.156944	0.157563	0.13429	0.173902	0.234059	0.271885	0.500226	0.479315	0.385605	0.239805	0.199821	0	0.128627	0	0.079756	0.374275	0.166227	0.170258	0.344028	0.203627	0.194577	0	0.193881	0.291009
5/1/2013 0:00	0.465674	0.107933	0.10093	0.187472	0.207147	0.241936	0.283763	0.309742	0.239294	0.143958	0.147914	0.081013	0.089398	0.0789	0.128582	0.122854	0.105719	0.101942	0.106673	0.140237	0.113428	0.104957	0.09148	0.141432
5/2/2013 0:00	0.304558	0.53528	0.497758	0.331176	0.293906	0.225477	0.151866	0.066249	0.077713	0.073579	0.049311	0.029612	0.018327	0.04269	0.070443	0.042108	0.043818	0.042305	0.106391	0.966495	1.038508	0	0.525228	0.180858
5/3/2013 0:00	0.115129	0.087176	0.132641	0.105695	0.103203	0.086497	0.075326	0.090373	0.085392	0.076324	0.087422	0.126985	0.108834	0.135243	0.117518	0.091772	0.039442	0.092163	0.051921	0.069074	0.075773	0.05187	0.080131	0.041031
5/4/2013 0:00	0.045837	0.027379	0.05902	0.072902	0.077414	0.050813	0.079264	0.061746	0.031855	0.068359	0.176793	0.293559	0.2209	0.241112	0.238334	0.247574	0.247341	0.201229	0.187575	0.152411	0.150525	0.373315	0.482612	0.463914
5/5/2013 0:00	0.459394	0.402889	0.276504	0.4477	0.249551	0.212379	0.274103	0.938709	2.341363	3.107641	2.398522	0.398819	0.171766	0.11793	0.144956	0.129736	0	0.063976	0.041935	0.051072	0.026188	0	0.026887	0.031799
5/6/2013 0:00	0.036211	0.031386	0.045207	0.019064	0.015836	0.029556	0.036121	0.029532	0.049633	0.046648	0.051116	0.034499	0.052974	0.03132	0.040194	0.059021	0.056534	0.022253	0.031288	0.059485	0.04467	0.085101	0.120642	0.108913
5/7/2013 0:00	0.052385	0.03447	0.012141	0.019499	0.042972	0.032056	0.043517	0.083006	0.083318	0.055382	0.049156	0.013564	0.050866	0.030426	0.02651	0.098254	0.092386	0.102563	0.102548	0.058231	0.02928	0	0.102628	0.08572
5/8/2013 0:00	0.120146	0.109584	0.101287	0.110414	0.069922	0.056357	0.051454	0.083265	0.106584	0.063287	0.097105	0.100698	0.086641	0.11239	0.082016	0.071883	0.119194	0.101896	0.086923	0.085364	0.034702	0.079381	0.097394	0.146799
5/9/2013 0:00	0.251084	0.082943	0.169553	0.153419	0.149814	0.097901	0.115598	0.155229	0.270378	0.332466	0.40814	0.462614	0.249624	0.840505	0	0	0.346875	0.217482	0.245502	0.151983	0.115516	0	0.238231	0.15489
5/10/2013 0:00	0.143339	0.077628	0.066558	0.074698	0.086619	0.049882	0.062561	0.0715	0.062657	0.166759	0.304752	0.147401	0.108698	0.150265	0.17379	0.207635	0.191896	0.146508	0.112575	0.083678	0.019905	0.017999	0.018109	0.020117
5/11/2013 0:00	0.04298	0.027432	0.034146	0.06811	0.119199	0.174973	0.144437	0.14821	0.150469	0.120353	0.141381	0.169004	0.129115	0.261449	0.643174	1.429289	1.000612	0.190692	0.138678	0.09426	0.105301	0.12382	0.089849	0.119621
5/12/2013 0:00	0.067414	0.058157	0.056705	0.049167	0.041798	0.039856	0.06334	0.097871	0.238229	0.19661	0.210598	0.249648	0.299212	0.291674	0.307346	0.252205	0.213204	0.293856	0.258744	0.189128	0.176306	0	0.244234	0.151798
5/13/2013 0:00	0.177678	0.154973	0.106691	0.14702	0.14546	0.201438	0.246575	1.284243	2.956724	2.182472	1.11674	0.4618	0.421905	0.365626	0.367053	0.363726	0.29734	0.295993	0.326846	0.361611	0.273327	0.289482	0.297211	0.238955
5/14/2013 0:00	0.201314	0.160087	0.136533	0.16465	0.146746	0.172801	0.174132	0.464343	1.250288	14.04372	4.551558	4.06307	5.3563	6.567177	5.292553	2.657317	2.701076	2.998273	1.442457	0.743056	0.571384	0	0.298241	0.149025
5/15/2013 0:00	0.057158	0.386831	0.475704	0.654661	0.728894	0.690226	0.824766	0.666986	0.566279	0.527809	0.542104	0.937095	0.712512	0.519967	0.528629	5.299816	8.422424	0.846093	0.80647	0.703553	0.470924	0.402513	0.375626	0.395386
5/16/2013 0:00	0.328071	0.370126	0.396601	0.336694	0.256406	0.204077	0.213078	0.243499	0.722048	0.529853	0.446717	0.277254	0.19097	0.212162	0	0.239009	0.22975	0.213026	0.130603	0.102113	0.060036	0	0.148021	0.162377
5/17/2013 0:00	0.125679	0.092376	0.10445	0.053138	0.085072	0.122402	0.161031	0.188076	0.247969	0.061395	0.054857	0.0527	0.095639	0.156149	0.110124	0.065615	0.101738	0.067029	0.017736	0.002081	0.005668	0.005954	0.003472	0.081292
5/18/2013 0:00	0.070806	0.101205	0.123799	0.107843	0.090756	0.048638	0.047326	0.04603	0.089412	0.269876	0.218393	0.255353	0.311199	0.21082	0.155144	0.171452	0.157159	0.145924	0.20294	0.184275	0.186923	0.10925	0.124098	0.163044
5/19/2013 0:00	0.166347	0.218401	0.297756	0.371086	0.243133	0.145756	0.169068	0.13852	0.128849	0.131014	0.121401	0.152793	0.163168	0.16609	0.171676	0.187523	0.245526	0.23008	0.260089	0.213603	0.17983	0	0.1627	0.066943
5/20/2013 0:00	0.059556	0.104092	0.093012	0.081622	0.131551	0.162476	0.212799	0.913013	1.309863	0.267043	0.232719	0.204653	0.149954	0.123603	0.17327	0.231858	0.231511	0.240587	0.270405	0.198693	0.188638	0.175341	0.171907	0.259003
5/21/2013 0:00	0.248602	0.271704	0.470447	0.550121	0.562382	0.37566	0.480302	0.336539	0.266445	0.264523	0.421976	0.457023	0.239342	0.185743	0.132126	0.200618	0.171018	0.173742	0.1888	0.153502	0.1121	0	0.201583	0.246722
5/22/2013 0:00	0.332553	0.331618	0.229057	1.225967	0.886962	0.626998	0.526722	0.323596	0.265566	0.31431	0.244362	0.181235	0.230922	0.157909	0.162951	2.846392	3.87423	8.249336	2.525738	2.471656	1.291969	2.33757	2.596993	0.647846
5/23/2013 0:00	0.223282	0.048858	0.06516	0.094093	0.05896	0.005975	0.035924	0.06415	0.124763	0.566133	0.810803	0.435779	0.276873	0.267177	0.191646	0.191746	0.241054	0.240751	0.234063	0.236739	0.211475	0	0.286706	0.296466
5/24/2013 0:00	0.221782	0.116206	0.122432	0.10918	0.165302	0.180455	0.174545	0.157817	0.148498	0.264716	0.277169	0.091162	0.098182	0.035082	0.030056	0.094326	0.126499	0.167124	0.17284	0.091584	0.106603	0.1028	0.169247	0.186862
5/25/2013 0:00	0.313085	0.41847	0.638959	0.525948	0.277987	0.179197	0.22506	0.801819	1.976227	0.758408	0.570153	0.482912	0.406234	0.355108	0.338594	0.330418	0.354527	0.361936	0.314274	0.258872	0.358023	1.060031	0.506167	1.42195
5/26/2013 0:00	2.651394	0.985279	1.502105	2.019523	1.857696	0.98226	0.696349	0.615	1.903161	1.485756	0.860541	0.489957	0.454812	0.352022	0.356597	0.330861	0.333274	0.36733	0.341374	0.348969	0.308734	0	0.321956	0.231911
5/27/2013 0:00	0.161679	0.199905	0.318741	0.273079	0.202551	0.201509	0.140385	0.384183	0.992976	0.524874	0.437182	0.696519	0.500172	0.325465	0.430451	0.54481	0.492991	0.468038	0.441328	0.434306	0.35542	0.291546	0.208814	0.885804
5/28/2013 0:00	0.668713	0.62416	0.885708	0.796866	0.940466	0.795377	0.538641	0.552603	0.782191	0.613783	0.549777	0.45765	0.270416	0.157038	0.193065	0.230975	0.358498	0.356573	0.346245	0.309343	0.235209	0	0.243573	0.180457
5/29/2013 0:00	0.11032	0.144647	0.216274	0.220553	0.212396	0.276598	0.470938	0.627991	0.558046	0.483514	0.42637	0	0.155491	0.110586	0.077637	0.07956	0.105422	0.061943	0.0786	0.061344	0.08191	0.034545	0.067532	0.067927
5/30/2013 0:00	0.046174	0.049297	0.053213	0.049638	0.066231	0.04365	0.044119	0.042219	0.029345	0.026484	0.028306	0.070567	0	0.0588	0.091457	0.094984	0.042281	0.058952	0.060455	0.104432	0.199085	0	0.200032	0.124397
5/31/2013 0:00	0	0.086334	0.048994	0.07575	0.026303	0.059394	0.122718	0.201555	0.262107	0	0.13194	0.091391	0.05263	0.085444	0.119664	0.12001	0.188198	0.191787	0.152978	0.138418	0.09323	0.077886	0.084359	0.076072
2nd Highest =	**2.65**	**2.40**	**2.55**	**2.32**	**2.18**	**1.80**	**1.48**	**2.01**	**2.96**	**3.82**	**4.50**	**3.55**	**2.51**	**3.96**	**2.61**	**2.85**	**3.87**	**3.00**	**1.88**	**1.27**	**1.21**	**1.88**	**4.09**	**4.15**

6/1/2013 0:00	0	0.074704	0.095442	0.076417	0.002644	-0.00908	0.014166	0.090425	0.204718	0.200876	0.169294	0.121493	0.100413	0.109541	0.141398	0.12667	0.058349	0.036931	0.023193	0.037251	0.018622	0.069041	0.07638	0.092969

Centrevill, AL SEARCH Monitor - 2013 Hourly SO2 Data (ppb)

	##########	1:00:00 AM	2:00:00 AM	3:00:00 AM	4:00:00 AM	5:00:00 AM	6:00:00 AM	7:00:00 AM	8:00:00 AM	9:00:00 AM	##########	##########	##########	1:00:00 PM	2:00:00 PM	3:00:00 PM	4:00:00 PM	5:00:00 PM	6:00:00 PM	7:00:00 PM	8:00:00 PM	9:00:00 PM	##########	##########
6/2/2013 0:00	0.117686	0.12803	0.147724	0.10534	0.090445	0.117872	0.146311	0.111948	0.146686	1.032342	1.027684	0.734451	0.508004	0.241556	0.135786	0.099485	0.141995	0.179009	0.119395	0.138857	0.099287	0	0.1194	0.081647
6/3/2013 0:00	0.05868	0.060568	0.080326	0.110699	0.127246	0.188657	0.175854	0.172316	0.534342	0.374156	0.155927	0.171844	0.150718	0.11675	0.1664	0.146778	0.135548	0.136605	0.138689	0.104438	0.036371	0.061581	0.072697	0.096271
6/4/2013 0:00	0	0.139333	0.139862	0.12763	0.182036	0.281361	4.074789	3.974177	1.749078	1.060443	0.794919	0.497195	0.361297	0.409907	0.336521	0.360886	0.359282	0.357144	0.307524	0.388143	1.29991	0	3.075284	1.039031
6/5/2013 0:00	0.434528	0.146513	0.16113	0.153906	0.206791	0.217927	0.182488	0.163718	0.17733	0.162867	0.173788	0.105311	0.066624	0.076101	0.096727	0.089872	0.059328	0.063451	0.063052	0.045594	0.041939	0.081188	0.040649	0.027886
6/6/2013 0:00	0.002442	0.015483	0.018036	0.019884	0.048105	0.092559	0.159555	0.167712	0.170002	0.199442	0.216784	0.390176	0.379428	0.274614	0.268718	0.186722	0.191727	0.144802	0.105891	0.027906	0.022436	0	0.079667	0.095914
6/7/2013 0:00	0.110362	0.11002	0.088509	0.116431	0.10275	0.126248	0.149318	0.166389	0.160639	0.155904	0.148297	0.094978	0.072061	0.053268	0.047836	0.109845	0.168788	0.075572	0.085937	0.118624	0.094134	0.074014	0.060284	-0.02304
6/8/2013 0:00	0.033921	-0.00192	0.012091	0.043579	0.010927	-0.00048	-0.04966	0.105883	0.31804	0.391744	0.354209	0.28491	0.249596	0.203611	0.182585	0.18297	0.178724	0.140129	0.161207	0.086891	0.087534	0.052736	0.13783	0.153456
6/9/2013 0:00	0.090623	0.101303	0.211594	0.122496	0.103839	0.115452	0.108828	0.12	0.08831	0.122749	0.078294	0.062298	0.086216	0.135294	0.13602	0.109506	0.167022	0.122044	0.125559	0.095302	0.120186	0	0.135507	0.105129
6/10/2013 0:00	0.120286	0.112931	0.119966	0.156878	0.159173	0.152422	0.18197	0.583058	0.925335	1.189618	1.080018	0.969144	0.420644	0.468887	0.489389	0.362462	0.894136	0.418141	0.212169	0.123293	0.066547	0.10898	0.156002	0.308951
6/11/2013 0:00	0.198355	0.191265	0.352779	1.842978	1.903293	1.36155	0.842231	0.326211	0.304992	0.244943	0.255597	0.258542	0.228082	0.181265	0.155011	0.167169	0.163384	0.143576	0.159847	0.080328	0.53251	0	0.719053	0.340599
6/12/2013 0:00	0.250312	0.200652	0.13565	0.120952	0.178857	0.176147	0.128577	0.095116	0.128284	0.125647	0.146406	0.156643	0.136043	0.139116	0.151605	0.239015	0.211527	0.16993	0.15013	0.134385	0.08152	2.437348	0.967143	0.637039
6/13/2013 0:00	0.458343	0.28899	0.221787	0.253456	0.233896	0.291031	0.30341	0.232093	0.208725	0.245025	0.250709	0.170372	0.113769	0.170931	0.184661	0.251183	0.164324	0.116805	0.100438	0.140676	0.164248	0	0.094022	0.216921
6/14/2013 0:00	0.296514	0.646564	0.674024	0.434728	0.275007	0.426703	0.387379	0.452082	0.325915	0.192257	0.111194	0.073146	0.386446	0.150906	0.208682	0.147889	0.186203	0.150497	0.140603	0.155036	0.158925	0.203728	0.16202	0.175175
6/15/2013 0:00	0.171031	0.32715	0.514273	0.180072	0.144879	0.399892	0.83753	0.497457	0.430363	0.71647	0.738048	0.55333	0.406083	0.395879	0.404805	0.365192	0.333736	0.383497	0.265703	0.251899	0.228375	0.204637	0.177203	0.235261
6/16/2013 0:00	0.203702	0.34776	0.474487	0.593816	0.62421	0.588141	0.497459	0.428017	0.332531	0.162329	0.118212	0.056992	0.091451	0.097207	0.120514	0.110276	0.109743	0.132236	0.166514	0.128696	0.127662	0	0.098704	0.067437
6/17/2013 0:00	0.063853	0.059439	0.086169	0.099669	0.225234	0.408207	0.470919	3.256148	3.478629	0.914147	0.8918	0.661276	0.372438	0.445368	0.274495	0.371378	0.131967	0.080749	0.081109	0.072012	0.091234	0.07464	0.109425	0.172657
6/18/2013 0:00	0	0.155111	0.145805	0.139614	0.169309	0.855759	0.612659	0.144075	0.106212	0.095187	0.06849	0.075164	0.066285	0.059329	0	0	0	0	0	0	0	0	0	0
6/19/2013 0:00	0	0	0	0	0	0	0	0	0	0	0	0	0	0	0	0	0	0	0	0	0	0	0	0
6/20/2013 0:00	0	0	0	0	0	0	0	0	0	0	0	0.149859	0.115203	0.192686	0.170575	0.82208	0.949486	0.583286	0.191752	0.130902	0.140022	0	0.106765	0.086398
6/21/2013 0:00	0.072563	0.128724	0.115403	0.202335	0.357483	0.333049	0.358705	0.219484	0.13662	0.133915	0.165006	0.141642	0.142802	0.150054	0.207709	0.158673	0.115777	0.106129	0.173157	0.165467	0.105098	0.081049	0.101143	0.256182
6/22/2013 0:00	0.275777	0.212308	0.301468	0.229487	0.274719	0.287175	0.490591	0.367535	0.293516	0.188538	0.205287	0.22295	0.111705	0.124087	0.104927	0.227099	0.626495	0.769542	0.239447	0.414516	0.365145	0.108044	0.136016	0.22428
6/23/2013 0:00	0.230453	0.278065	0.193883	0.18592	0.15637	0.199867	0.311208	0.414117	0.291858	0.20988	0.160139	0.142417	0.126283	0.126439	0.15262	0.149981	0.178929	0.162848	0.140514	0.135828	0.063451	0	0.230492	0.188129
6/24/2013 0:00	0.165743	0.183687	0.206752	0.191486	0.16446	0.135543	0.152339	0.226836	0.237832	0.176105	0.242412	0.244995	0.247534	0.238279	0.180331	0.167607	0.205979	0.152649	0.107175	0.102556	0.110532	0.125791	0.106465	0.109332
6/25/2013 0:00	0.181518	0.251876	0.251671	0.228784	0.166047	0.143256	0.32223	3.900806	5.370086	2.681824	1.72444	3.964556	1.106478	0.411035	0.403553	0.344754	0.346797	0.456263	0.403952	0.284872	0.237399	0	0.187233	0.149412
6/26/2013 0:00	0.107987	0.0876	0.13141	0.121824	0.150186	0.151138	0.516755	1.811926	1.270828	0.681116	0.937658	2.376826	2.30439	4.823799	7.379892	4.077585	6.605024	6.591294	6.108478	6.016587	3.742271	0.493046	0.200186	0.530289
6/27/2013 0:00	0.862005	1.011871	0.955322	2.038538	2.494086	1.330194	1.114734	0.501655	0.494839	0.403236	0.416844	0.241264	0.281869	0.248462	0.229335	0.216294	0.255823	0.283062	0.25057	0.212565	0.15531	0	0.136066	0.03992
6/28/2013 0:00	0.08515	0.235452	0.14359	0.162517	0.166217	0.146301	0.163704	0.17223	0.237369	0.395316	0.36124	0.171938	0.154624	0.163359	0.16624	0.158223	0.177571	0.267624	0.294586	0.109536	0.102369	0.059361	0.07463	0.043263
6/29/2013 0:00	0.068397	0.08486	0.101439	0.121129	0.059364	0.062897	0.053353	0.073882	0.051378	0.080905	0.086169	0.153576	0.139162	0.172575	0.28464	0.275026	0.292956	0.338467	0.480945	0.502717	0.479447	0.333863	0.538809	0.460767
6/30/2013 0:00	0.22968	0.199354	0.196311	0.183994	0.166176	0.152981	0.160242	0.250757	0.657433	0.335082	0.253826	0.197767	0.269303	0.265977	0.319128	0.265186	0.305263	0.145463	0.140714	0.140398	0.598396	0	0.32242	0.335435
7/1/2013 0:00	0.199106	0.180876	0.189333	0.19474	0.161019	0.199079	0.092318	0.057636	0.079738	0.164136	0.181049	0.228225	0.241614	0.201498	0.176064	0.186767	0.176777	0.137438	0.05208	0.030281	0.071811	0.079077	0.089601	0.047118
7/2/2013 0:00	0.003079	0.04712	0.041139	0.061069	0.054423	0.081314	0.11828	0.171808	0.18182	0.1707	0.145809	0.132213	0.068719	0.106042	0.213406	0.300426	0.17908	0.134366	0.16355	0.186896	0.147665	0	0.105609	0.068828
7/3/2013 0:00	0.068813	0.065197	0.126432	0.122906	0.099703	0.060248	0.424898	1.311013	1.271724	0.522081	0.458029	0.458353	0.458241	0.304904	0.14763	0.118775	0.138766	0.092926	0.092413	0.056344	0.0544	0.030927	0.110218	0.061644
7/4/2013 0:00	0.04696	0.062504	0.087394	0.05103	0.067934	0.089776	0.106003	0.137579	0.13502	0.126909	0.150167	0.216447	0.160219	0.071925	0.071351	0.085636	0.063204	0.068096	0.06938	0.039449	0.013734	0	0.0273	-0.01559
7/5/2013 0:00	-0.01091	-0.01939	0.029687	0.091849	0.107723	0.074963	0.119262	0.076474	0.042114	0.046233	0.03888	0.039064	0.074927	0.05192	0.091302	0.081519	0.064957	0.052091	0.064081	0.029728	0.025865	0.006434	0.004508	0.170802
7/6/2013 0:00	0.085568	0.101111	0.100223	0.107891	0.11801	0.128461	0.157613	0.135503	0.151137	0.162285	0.140804	0.157414	0.135391	0.287142	0.147747	0.125009	0.151087	0.078202	0.04821	0.232555	0.181028	0.085675	0.069514	0.062171
7/7/2013 0:00	0.062658	0.06643	0.065075	0.052233	0.031701	0.006734	0.011908	0.052567	0.042917	0.102125	0.051011	0	0	0	0	0.202731	0.145446	0.128197	0.154695	0.087918	0.065719	0.054002	0.042497	0.039815
7/8/2013 0:00	0.036848	0.041729	0.031019	0.072632	0.093134	0.094596	0.082258	0.234916	0.347555	0.389694	0.245981	0	0	0.234193	0.162897	0.173219	0.269776	0.23515	0.241238	0.165305	0.143465	0.099758	0.072947	0.035592
7/9/2013 0:00	0.056451	0.164484	0.119671	0.099863	0.122946	0.522237	0	0	0.114277	0.088695	0.125185	0.092626	0.116014	0.127627	0.134325	0.102608	0.102815	0.149882	0.124407	0.052953	0.079133	0	0.098617	0.052362
7/10/2013 0:00	0.063896	0.063678	0.059214	0.045221	0.097714	0.081274	0.215312	0.26792	0.197161	0.223052	0.191293	0.189438	0.191047	0.175626	0.209889	0.16137	0.060344	0.06873	0.056975	0.069426	0.050801	0.056733	0.068239	0.053886
7/11/2013 0:00	0	0	0	0	0	0	0.053775	0.002692	0	0	0.094563	0.189808	0.141833	0.096962	0.116517	0.131837	0.107147	0.100704	0.121627	0.108659	0.080736	0	0.09192	0.122989
7/12/2013 0:00	0.085454	0.103687	0.102007	0.14102	0.126666	0.111736	0.160347	0.209407	0.213964	0.281895	0.311846	0.245098	0.231432	0.181878	0.147228	0.116467	0.131222	0.094811	0.123243	0.091484	0.068516	0.089735	0.071151	0.125444
7/13/2013 0:00	0.126424	0.145974	0.116699	0.156686	0.197869	0.241814	0.565203	1.030907	1.551864	0.361702	0.207014	0	0	0.068696	0.007127	0.069378	0.098128	0.137141	0.113463	0.144198	0.125132	0.132575	0.156232	0.139626
7/14/2013 0:00	0.182144	0.15564	0.133547	0.094822	0.032311	0.172244	0.097664	0.017558	0.038151	0.0617	0.077353	0.087681	0.069818	0.096988	0.123715	0.133907	0.120082	0.135002	0.083654	0.097442	0.10389	0	0.126217	0.081481
7/15/2013 0:00	0.077803	0.042935	0.016609	0.01669	0.003481	-0.01689	0.007069	0.029187	0.046378	0.027888	0.045308	0.093374	0.117183	0.079305	0.063976	0.045637	0.087388	0.078099	0.083489	0.036854	0.013291	0.033411	0.044118	0.003807
7/16/2013 0:00	0.007027	0.022556	0.004656	0.033482	0.046622	0.054914	0.052305	0.073025	0.108354	0.097051	0.093275	0.114322	0.187692	0.153349	0.14256	0.157844	0.15623	0.138945	0.14009	0.201036	0.094427	0	0.108993	0.040509
7/17/2013 0:00	0.028769	0.1312	0.217059	0.34321	0.430915	0.779424	1.279303	2.507542	1.864453	1.138866	1.351722	1.383984	2.17915	2.736518	0.883496	0.581821	0.695963	0.598588	0.50242	0.313381	0.314499	0.19615	0.087017	0.057624
7/18/2013 0:00	0.125226	0.107641	0.12956	0.116052	0.094334	0.064271	0.062432	0.347756	0.490229	0.257816	0.170017	0.153933	0.151638	0.135151	0.123365	0.132989	0.196273	0.180887	0.232768	0.260703	0.290611	0	0.257943	0.162783
7/19/2013 0:00	0.131857	0.093109	0.078059	0.02278	0.026083	0.03009	0.098172	1.079635	9.285086	7.473392	4.982591	1.100952	0.475306	0.251438	0.204315	0.16077	0.162373	0.130499	0.137222	0.156642	0.148592	0.185242	0.170352	0.157432
7/20/2013 0:00	0.118608	0.124869	0.110196	0.08984	0.105207	0.062289	0.095343	0.150782	0.326302	0.191511	0.16369	0.127332	0.123685	0.144975	0.168572	0.133284	0.118799	0.088305	0.129331	0.136193	0.147875	0.182906	0.157073	0.131427
7/21/2013 0:00	0.094439	0.037039	0.029477	0.023258	0.019455	0.108099	0.198667	0.23438	0.284474	0.258116	0.363125	0.389586	0.310565	0.276719	0.342507	0.696962	0.204339	0.126534	0.055707	0.041332	0.031966	0	0.032411	0.053104
7/22/2013 0:00	0.090877	0.116776	0.75295	1.221486	1.069808	0.863315	1.763314	5.019446	4.135763	2.108932	0.794289	0.353829	0.283221	0.148329	0.026466	0.026171	0.0711	0.059623	0.030989	0.044733	0.050156	0.04169	0.025558	0.018918
7/23/2013 0:00	0.080035	0.555359	0.688847	0.951009	0.680545	0.370424	0.226579	0.084319	0.358139	0.123975	0.12277	0.132499	0.223477	0.146677	0.062108	0.076042	0.108424	0.060974	0.344051	1.210683	0.895402	0	0.341568	0.717976
7/24/2013 0:00	0.348282	0.210602	0.157649	0.138142	0.127661	0.105086	0.150518	0.331855	0.330413	0.224114	0.227929	0.205594	0.217696	0.283161	0.252812	0.168721	0.106264	0.128142	0.149359	0.13311	0.118844	0.080467	0.058316	0.05261
7/25/2013 0:00	0.062379	0.100526	0.068376	0.058965	0.021852	0.042645	0.05919	0.0936	0.112471	0.160533	0.212377	0.195348	0.182364	0.225996	0.24014	0.272392	0.320926	0.325026	0.218454	0.232771	0.215837	0	0.340724	0.292155
7/26/2013 0:00	0.253634	0.376067	0.342339	0.313565	0.306956	0.262367	0.367416	0.883349	2.712787	3.264563	1.523737	0.583539	3.1043	4.735114	2.46421	0.879969	0.908029	0.892374	0.534897	0.368573	0.339518	0.405654	0.346416	0.335869
7/27/2013 0:00	0.30613	0.216605	0.172207	0.202959	0.188267	0.141909	0.133522	0.028976	0.060833	0.054032	0.085658	0.479054	0.445066	0.27857	0.220583	0.191834	0.125458	0.073081	0.102522	0.334209	0.429612	0.200253	0.159171	0.123813
7/28/2013 0:00	0.130447	0.055762	0.111905	0.070593	0.092491	0.099933	0.106378	0.134398	0.333074	0.552531	0.589746	0	0	0.347147	0.304867	0.241762	0.304743	0.227374	0.191587	0.50278	0.18329	0	0.162329	0.080187
7/29/2013 0:00	0.088325	0.253434	0.332524	0.5938	0.632398	0.574183	0.551421	0.7722	1.147622	0.726881	0.401804	0.164906	0.16653	0.205199	0.259833	0.328188	0.505189	0.331617	0.452629	0.336672	0.228091	0.266847	0.314278	0.390129
7/30/2013 0:00	0.448358	0.431369	0.461853	1.208286	0.616933	1.561867	1.172805	0.660268	0.037238	0.043852	0.026014	0.023942	0.045491	0.038769	0.026177	0.082223	0.096924	0.114993	0.108558	0.078879	0.093487	0	0.080503	0.069026
7/31/2013 0:00	0.085728	0.1046	0.104473	0.127719	0.126662	0.145941	0.142269	0.158606	0.587377	0.648208	0.551123	0.408844	0.342456	0.353701	0.421035	0.42004	0.3502	0.323737	0.198155	0.136678	0.166839	0.160279	0.142458	0.134979
8/1/2013 0:00	0.121505	0.103917	0.113816	0.098684	0.088851	0.120043	0.15382	0.156165	0.199634	0.160991	0.146398	0.111356	0.108424	0.118549	0.122952	0.138103	0.085222	0.083397	0.120503	0.074586	0.084307	0	0.137908	0.135752
8/2/2013 0:00	0.084964	0.084517	0.073236	0.095599	0.066785	0.180888	0.42771	1.190947	3.384682	1.117885	0.560839	0.652069	0.695158	0.307125	0.222696	0.210704	0.226316	0.211761	0.169377	0.117513	0.143178	0.13119	0.115498	0.042812
8/3/2013 0:00	0.042905	0.026206	0.031667	0.107673	0.109096	0.078804	0.133502	0.824197	3.70166	1.231857	1.058779	0.721816	0.561953	0.413392	0.070011	0.043806	0.06637	0.039595	0.042015	0.061825	0.130394	0.105115	0.095557	0.076322

Centrevill, AL SEARCH Monitor - 2013 Hourly SO2 Data (ppb)

	##########	1:00:00 AM	2:00:00 AM	3:00:00 AM	4:00:00 AM	5:00:00 AM	6:00:00 AM	7:00:00 AM	8:00:00 AM	9:00:00 AM	##########	##########	##########	1:00:00 PM	2:00:00 PM	3:00:00 PM	4:00:00 PM	5:00:00 PM	6:00:00 PM	7:00:00 PM	8:00:00 PM	9:00:00 PM	##########	##########
8/4/2013 0:00	0.079146	0.084205	0.09318	0.118032	0.070317	0.068366	0.131175	0.395031	0.294202	0.234693	0.212493	0.238212	0.172356	0.180775	0.194898	0.169218	0.125959	0.139859	0.080316	0.048523	0.112567	0	0.107199	0.053972
8/5/2013 0:00	0.09789	0.10394	0.110344	0.243396	0.254507	0.256238	0.31472	0.291856	0.539133	0.800917	0.755996	0.593254	0.579615	0.613846	0.473882	0.442387	0.317472	0.176816	0.151676	0.139771	0.108485	0.133671	0.109236	0.097264
8/6/2013 0:00	0.091894	0.01478	0.02905	0.037384	0.011111	0.04289	0.065883	3.695795	0.682284	0.343815	0.487604	0.629981	0.55475	0.174841	0.038768	0	0	0	0	0	0	0	0	0
8/7/2013 0:00	0	0	0	0	0	0	0	0	0	0	0	0	0	0	0	0.146872	0.219274	0.194724	0.136732	0.0854	0.114635	0.105346	0.056465	0.022199
8/8/2013 0:00	0.075272	0.094282	0.074077	0.092227	0.164366	0.162523	0.145796	0.24736	0.299396	0.608503	0.464277	0.381881	0.296188	0.230756	0.221485	0.211199	0.176998	0.239494	0.0984	0.146822	0.214534	0	0.161893	0.200551
8/9/2013 0:00	0.283471	0.237551	0.232159	0.18981	0.181099	0.120521	0.154207	0.21031	0	0	0	0	0	0	0	0.093813	0.091971	0.062092	0.067117	0.064827	0.035375	0.090299	0.07867	0.057574
8/10/2013 0:00	0.075575	0.083455	0.108881	0.122796	0.112877	0.079927	0.110414	0.238789	0.57926	0.323764	0.578268	0.208615	0.184733	0.228927	0.182502	0.159938	0.180521	0.154448	0.236306	0.120987	0.090253	0.037585	0.050226	0.039199
8/11/2013 0:00	0.056705	0.067457	0.090362	0.098462	0.07104	0.098219	0.099119	0.335702	0.672908	0.666288	0.926161	1.830348	1.60441	0.601463	0.211352	0.116814	0.184525	0.254666	0.290785	0.331127	0.288245	0	0.779325	0.591281
8/12/2013 0:00	0.487646	0.383121	0.3379	0.290718	0.269307	0.247655	0.219201	0.231504	0.263019	0.258648	0.248731	0.241165	0.273806	0.240219	0.231211	0.219409	0.089264	0.688755	0.630486	0.13684	0.028881	0.384751	0.140541	0.225787
8/13/2013 0:00	1.21743	1.578808	1.214803	0.445907	0.166878	0.126407	0.220247	0.810137	0.619727	0.256379	0.151632	0.11181	0.082752	0.08062	0.153981	0.161722	0.073712	0.043057	0.112097	0.086235	0.437417	0	0.096613	0.00205
8/14/2013 0:00	0.044665	0.079417	0.073479	0.06824	0.12549	0.093061	0.014569	0.012666	0.034117	0.044429	0.070633	0.095888	0.247732	0.635982	0.406264	0.217208	0.214722	0.19767	0.17135	0.123458	0.104803	0.084369	0.108742	0.132994
8/15/2013 0:00	0.16011	0.252156	0.293918	0.367288	0.543974	0.578287	0.574953	1.002856	1.225664	0.642779	0.5477	0.7795	0.628236	0.405204	0.350163	0.798592	1.439941	0.169244	0.093981	0.093374	0.082828	0	0.065443	0.071953
8/16/2013 0:00	0.060954	0.108749	0.147277	0.122292	0.172596	0.171777	0.170707	0.158013	0.240293	0.140358	0.163922	0.79616	0.490885	0.368224	0.389312	0.534928	0	0	0	0	0	0	0	0
8/17/2013 0:00	0	0	0	0	0	0	0	0	0	0	0	0	0	0	0	0	0	0	0	0	0	0	0	0
8/18/2013 0:00	0	0	0	0	0	0	0	0	0	0	0	0	0	0.071621	0.032337	0.050688	0.370437	0.503591	0.963153	0.527744	0.167745	0	0.063781	0.052992
8/19/2013 0:00	0.476261	0.396739	0.147002	0.066387	0.064029	0.106331	0.163696	0.299893	0.232149	0.139352	0.104396	0.080436	0.096217	0.037381	0.047256	0.060946	0.044929	0.040094	0.029892	0.093571	0.0495	0.056783	0.101192	0.076799
8/20/2013 0:00	0.037414	0.037258	0.048162	0.111122	0.104997	0.134056	0.120412	0.114132	0.068513	0.062611	0.058815	0.04179	0.065794	0.106381	0.09679	0.202719	0.225543	0.231394	0.183782	0.218322	0.13923	0	0.061654	0.069351
8/21/2013 0:00	0.050934	-0.00939	0.032521	0.026205	0.035145	0.014161	0.00885	0.194435	0.309073	0.250697	0.16971	0.090537	0.051405	0.049078	0.022884	0.015438	0.047233	0.052958	0.03236	0.044981	0.116558	0.068576	0.092164	0.069778
8/22/2013 0:00	0.084037	0.024076	0.095858	0.156019	0.11466	0.087937	0.326359	0.349074	0.320725	0.21473	0.162818	0.124941	0.157668	0.110563	0.09194	0.095486	0.130076	0.159659	0.148386	0.233062	0.181333	0	0.190659	0.233877
8/23/2013 0:00	0.396217	0.465071	0.309305	0.27136	0.119211	0.095137	0.041562	0.069396	0.122555	0.162319	0.123603	0.064436	0.050119	0.031317	0.039693	0.061553	0.079112	0.056103	0.085234	0.105067	0.129595	0.125493	0.108642	0.046584
8/24/2013 0:00	0.032354	0.023066	0.158938	0.190195	0.232852	0.135453	0.166096	0.328526	1.294932	1.862281	0	0.138227	0.169257	0.189569	0.171351	0.172203	0.112091	0.075685	0.044707	0.072017	0.07509	0.110299	0.029112	0.049804
8/25/2013 0:00	0.086859	0.104906	0.091707	0.07394	0.079209	0.108944	0.110955	0.14031	0.145178	0.143772	0.114104	0.098403	0.101223	0.056538	0.01942	0	0	0.196448	0.140425	0.169873	0.134279	0	0.255477	0.221453
8/26/2013 0:00	0.251071	0.22399	0.154772	0.140482	0.136731	0.120033	0.206557	0.186249	0.142717	0.178227	0.276259	0.249186	0.193868	0.337613	0.293155	0.241666	0.212229	0.231334	0.213904	0.187575	0.256717	0.278867	0.214583	0.086557
8/27/2013 0:00	0.133279	0.139615	0.130031	0.176691	0.304721	0.212145	0.354187	3.689188	4.003546	2.203956	1.699174	1.320653	1.397798	0.825837	0.769083	0.950104	0.960246	0.789952	0.762334	0.6042	0.457542	0	0.315829	0.244183
8/28/2013 0:00	0	0	0	0	0	0	0	0	0.066679	0.155379	0.206132	0.199728	0.178361	0.132051	0.112926	0.153618	0.171377	0.136934	0.18388	0.165074	0.070544	0.037151	0.036312	0.07174
8/29/2013 0:00	0.079107	0.079701	0.083869	0.107313	0.089745	0.111833	0.150195	0.256314	0.322044	0.315165	0.233828	0.266375	0.231418	0.251721	0.312851	0.420891	0.356329	0.261864	0.152446	0.103768	0.056209	0	0.162871	0.135942
8/30/2013 0:00	0.247036	0.322931	0.251579	0.248727	0.212172	0.263703	0.209946	0.282679	0.421426	0.603791	0.672549	0.579679	0.348522	0.261486	0.1907	0.342888	0.177889	0.132282	0.09972	0.037735	0.067531	0.06898	0.103183	0.140309
8/31/2013 0:00	0.159803	0.144075	0.131811	0.164909	0.1436	0.178868	0.200271	0.373333	0.349797	0.379312	0.540047	0.289404	0.232904	0.215326	0.16416	0.118565	0.11301	0.085523	0.085471	0.082047	0.114829	0.13245	0.062757	0.023153
2nd Highest =	**0.86**	**1.01**	**0.96**	**1.84**	**1.90**	**1.36**	**1.76**	**3.97**	**5.37**	**3.26**	**1.72**	**2.38**	**2.30**	**4.74**	**2.46**	**0.95**	**1.44**	**0.89**	**0.96**	**1.21**	**1.30**	**0.49**	**0.97**	**0.72**
9/1/2013 0:00	0.048997	0.044794	0.027144	-0.00477	0.013625	0.008068	0.012913	0.193318	0.749367	0.834512	0.661066	0.561775	0.495938	0.324239	0.255795	0.215176	0.235515	0.229373	0.147676	0.097339	0.145334	0	0.231367	0.276613
9/2/2013 0:00	0.185952	0.132822	0.127994	0.103847	0.293234	1.029879	0.610091	0.435105	0.214946	0.217358	0.235909	0.221519	0.271178	0.304103	0.252326	0.169151	0.297137	1.328659	1.701517	1.457657	0.6721	0.732308	0.382467	0.307492
9/3/2013 0:00	0.225153	0.187405	0.188821	0.183996	0.106071	0.130165	0.188981	0.326206	0.475138	0.328495	0.2773	0.222307	0.23742	0.149625	0.124783	0.152663	0.18646	0.190928	0.150279	0.166942	0.122205	0	0.106971	0.117666
9/4/2013 0:00	0.140425	0.148536	0.125371	0.061341	0.072104	0.098414	0.109262	0.427457	1.462115	6.250261	3.167372	0.43716	0.407503	0.368778	0.362896	0.317629	0.322336	0.292968	0.256535	0.159959	0.122541	0.138697	0.176338	0.204434
9/5/2013 0:00	0.144138	0.123668	0.18651	0.160321	0.203321	0.1723	0.145497	0.215133	0.644958	1.082755	0.454584	0.331822	0.392949	0.26055	0.185595	0.261572	0.275573	0.198387	0.10749	0.17506	0.207286	0	0.187191	0.121611
9/6/2013 0:00	0.132898	0.10783	0.078279	0.058238	0.121787	0.057046	0.096344	0.153959	0.268309	0.609283	0.663171	0.637628	0.604803	0.727894	1.051522	1.366729	0.94127	0.709668	0.618519	0.841927	0.876991	0.510808	0.259286	0.624949
9/7/2013 0:00	0.777934	0.543017	0.703641	0.541201	0.525407	0.312914	0.356152	0.3221	0.293768	0.260898	0.285491	0.256775	0.268552	0.301111	0.278726	0.278294	0.198711	0.237251	0.303189	0.33509	0.300232	0.277245	0.260443	0.233071
9/8/2013 0:00	0.191359	0.171754	0.174298	0.259253	0.402636	0.393847	0.458676	0.347161	0.357053	0.413362	0.585719	0.677664	0.588579	0.577949	0.534732	0.399206	0.373692	0.297723	0.226736	0.212437	0.152216	0	0.146298	0.149522
9/9/2013 0:00	0.082532	0.073681	0.080847	0.105241	0.06159	0.099971	0.150813	0.127914	0.675502	3.51742	2.9806	3.636718	3.74413	2.558752	1.739005	1.760783	1.735143	1.470386	1.316432	0.363185	0.359256	0.319192	0.290845	0.288665
9/10/2013 0:00	0.225623	0.570568	0.759072	1.875955	1.69436	0.703375	0.354451	0.335539	0.505293	0	0	0.679304	0.471253	0.508585	0.455077	0.275084	0.27812	0.298017	0.233186	0.220988	0.229597	0	0.154911	0.117194
9/11/2013 0:00	0.155434	0.159841	0.172837	0.215784	0.25595	0.213739	0.197531	0.176939	0.143545	0.102546	0.103196	0.100409	0.079699	0.087789	0.128604	0.168079	0.183497	0.198813	0.141739	0.146553	0.165634	0.104045	0.1119	0.150129
9/12/2013 0:00	0.187054	0.22644	0.288093	0.575408	0.46316	0.361271	0.429513	0.401446	0.864538	0.53407	0.352697	0.234653	0.262602	0.254448	0.248636	0.250386	0.31313	0.280557	0.28292	0.182096	0.182995	0	0.263972	0.237617
9/13/2013 0:00	0.194154	0.245466	0.254105	0.19109	0.147173	0.180194	0.180755	0.220728	0.314407	0.503394	0.579596	0.761479	1.11632	1.293154	1.124854	0.800255	0.758176	0.689457	0.485184	0.308763	0.306662	0.267471	0.355292	0.553055
9/14/2013 0:00	0.846046	0.987459	1.403422	1.108681	0.845102	0.900136	0.968833	0.632213	0.510693	0.486538	0.40885	0.414402	0.377586	0.393013	0.492741	0.478434	0.431957	0.319041	0.297423	0.581132	0.710441	0.659136	0.557763	0.647283
9/15/2013 0:00	0.905941	1.676844	1.159892	0.671557	0.533048	0.619025	0.737523	0.637238	0.744138	0.723739	0.664722	0.695406	0.742413	0.736345	0.677446	0.706572	0.70531	0.664445	0.753462	0.704491	0.534409	0	0.413388	0.342994
9/16/2013 0:00	0.331641	0.388838	0.335695	0.94172	0.940915	1.060165	1.485148	8.019539	5.571119	1.470915	1.062126	0.835501	0.609929	0.547343	0.596304	0.584137	0.545251	0.459659	0.465518	0.473211	0.531689	3.159997	2.698515	2.524556
9/17/2013 0:00	1.705304	1.129405	0.834504	0.925315	0.523911	0.295339	0.30872	1.068461	3.523344	3.209424	1.597489	0.832295	0.740836	0.837648	0.589696	0.442004	0.329929	0.169589	0.288349	0.26481	0.19731	0	0.214594	0.244658
9/18/2013 0:00	0.319783	0.33774	0.33679	0.249874	0.248071	0.161636	0.123035	0.188665	0.191406	0.172542	0.134728	0.168418	0.101043	0.101672	0.1401	0.136061	0.059633	0.06989	0.057663	0.116737	0.125947	0.070005	0.086672	0.061792
9/19/2013 0:00	0.094959	0.101691	0.050199	0.087004	0.159825	0.138782	0.225986	0.258183	0.317581	0.401701	0.449784	0.379974	0.28968	0.230985	0.236805	0.287348	0.219012	0.163208	0.248742	0.14249	0.185411	0	0.177546	0.321502
9/20/2013 0:00	0.42916	0.346032	0.514167	0.542806	0.728771	0.776214	0.756704	0.753852	1.057101	0.587409	0.385794	0.449042	0.450294	0.402595	0.347571	0.278494	0.265304	0.177112	0.22046	0.175353	0.110688	0.117372	0.123453	0.123154
9/21/2013 0:00	0.116418	0.125069	0.136621	0.078324	0.070889	0.062064	0.074003	0.270009	0.199894	0.105181	0.0922	0.076224	0.114024	0.092859	0.080418	0.097797	0.091152	0.03828	0.088227	0.055029	0.034085	0.040825	0.046366	0.075124
9/22/2013 0:00	0.066848	0.136962	0.175259	0.150978	0.13917	0.11845	0.158702	0.297094	0.335442	0.339119	0.376531	0.389507	0.449242	0.488097	0.486195	0.589678	0.61108	0.414313	0.291422	0.235652	0.173188	0	0.316305	0.540077
9/23/2013 0:00	0.450994	0.633959	0.623179	0.431918	0.380233	0.402608	1.069981	1.202181	0.979914	0.523264	0.410144	0.336786	0.304332	0.279172	0.222598	0.172371	0.106988	0.104678	0.105078	0.092693	0.110685	0.061213	0.063995	0.075075
9/24/2013 0:00	0.095003	0.086003	0.036858	0.01095	0.069906	0.058101	0.05093	0.059402	0.088899	0.107001	0.08895	0.094744	0.104557	0.086169	0.076696	0.075218	0.068964	0.054402	0.074053	0.091926	0.074313	0	0.478017	0.853684
9/25/2013 0:00	0.172077	0.134161	0.086733	0.052172	0.035314	0.063552	0.04477	0.057489	0.096977	0.315696	0.414573	0.28943	0.24873	0.254679	0.279133	0.257646	0.291541	0.274429	0.217544	0.127242	0.111455	0.436656	1.027994	0.697605
9/26/2013 0:00	0.374594	0.151062	0.119068	0.118648	0.149384	0.170159	0.172848	0.414568	0.962426	1.889338	3.342582	1.981967	0.660435	0.391738	0.29476	0.274786	0.236824	0.210245	0.276845	1.192591	1.189541	0	0.648976	0.283372
9/27/2013 0:00	0.1877	0.171346	0.136448	0.13382	0.10779	0.034124	0.11853	0.216233	0.198414	0.197154	0.370501	0.248481	0.15471	0.143203	0.15493	0.678831	1.518389	2.50493	0.938385	1.039647	0.981882	0.649158	0.474217	0.376611
9/28/2013 0:00	0.201768	0.219159	0.241475	0.248545	0.235751	0.159527	0.189674	0.189192	0.129372	0.134482	0.130611	0.064823	0.055632	0.077122	0.102422	0.104043	0.219513	0.107046	0.153998	0.150802	0.158219	0.118601	0.099043	0.089164
9/29/2013 0:00	0.050115	0.103244	0.1642	0.199534	0.109225	0.075193	0.110215	0.147996	0.127803	0.096315	0.048739	0.086584	0.139726	0.230365	0.146543	0.147506	0.134808	0.249195	0.169425	0.154032	0.123307	0	0.121201	0.062538
9/30/2013 0:00	0.069068	0.075878	0.099663	0.155523	0.133179	0.152877	0.116175	0.239518	0.156852	0.078242	0.06656	0.100017	0.149355	0.165466	0.180113	0.233479	0.289369	0.136997	0.166329	0.153976	0.130481	0.123535	0.136901	0.142289
10/1/2013 0:00	0.116926	0.087957	0.094987	0.148173	0.196315	0.492205	0.470505	0.385591	0.410255	0.382653	0.414628	0.38461	0.238874	0.320653	0.280505	0.23861	0.224455	0.198496	0.186859	0.216719	0.174655	0	0.147883	0.165359
10/2/2013 0:00	0.182832	0.146559	0.093041	0.069623	0.085627	0.19504	0.16978	0.284825	0.394788	0.298492	0.289626	0.249388	0.243727	0.168551	0.216594	0.219174	0.222264	0.19234	0.15827	0.108941	0.114287	0.152393	0.195303	0.202298

Centrevill, AL SEARCH Monitor - 2013 Hourly SO2 Data (ppb)

	##########	1:00:00 AM	2:00:00 AM	3:00:00 AM	4:00:00 AM	5:00:00 AM	6:00:00 AM	7:00:00 AM	8:00:00 AM	9:00:00 AM	##########	##########	##########	1:00:00 PM	2:00:00 PM	3:00:00 PM	4:00:00 PM	5:00:00 PM	6:00:00 PM	7:00:00 PM	8:00:00 PM	9:00:00 PM	##########	##########
10/3/2013 0:00	0.222654	0.233317	0.213628	0.241096	0.317364	0.348512	0.525242	0.390212	0.463092	0.443436	0.411503	0.479129	0.4576	0.504628	0.503171	0.448351	0.448938	0.410508	0.446026	0.34899	0.244839	0	0.176768	0.292659
10/4/2013 0:00	0.273236	0.156487	0.183259	0.256008	0.283386	0.188597	0.27322	0.570837	0.763597	0.625205	0.566969	0.556528	0.576787	0.308274	0.27482	0.379456	0.371174	0.248991	0.130738	0.098272	0.04194	0.051271	0.101672	0.187497
10/5/2013 0:00	0.219924	0.304065	0.254285	0.210085	0.260933	0.264576	0.606962	0.768992	0.649925	0.611021	0.390572	0.242603	0.239144	0.359157	0.543525	0.611696	0.519622	0.291942	0.190617	0.152435	0.172686	0.203924	0.294202	0.261781
10/6/2013 0:00	0.194533	0.140635	0.168594	0.16188	0.161166	0.128398	0.069812	0.183694	0.325832	0.242345	0.225323	0.201332	0.099401	0.024644	0.027889	0.042502	0.027823	0.048374	0.009486	0.049432	0.030211	0	0.087517	0.042228
10/7/2013 0:00	0.068952	0.09864	0.073083	0.053179	0.017444	0.017806	0.014394	0.035082	0.031614	0.056396	0.034129	0.090645	0.08122	0.099275	0.102556	0.121651	0.092076	0.039827	0.031639	0.035845	0.049296	0.079646	0.110285	0.144576
10/8/2013 0:00	0.035056	0.047216	0.135471	0.160759	0.175879	0.125944	0.178122	0.330708	0.660351	1.086745	0.957503	0.509246	0.390206	0.259571	0.158305	0.112881	0.103281	0.131404	0.201919	0.45219	0.212295	0	0.149254	0.15909
10/9/2013 0:00	0.175491	0.159302	0.09963	0.037571	0.034416	0.05478	0.053845	0.10176	0.125701	0.103567	0.131672	0.104107	0.092651	0.05859	0.056419	0.05409	0.04203	0.018619	0.026209	0.020431	0.040437	0.077717	0.083039	0.057733
10/10/2013 0:00	0.058616	0.042205	0.074621	0.072035	0.082785	0.098289	0.085727	0.089005	0.148059	0.212878	0.204837	0.180354	0.145933	0.171967	0.191682	0	0	0.158967	0.107051	0.191789	0.269421	0	0.225562	0.307937
10/11/2013 0:00	0.51203	0.624885	0.325937	0.19286	0.225763	0.133623	0.201917	0.211206	0.244039	0.311956	1.057669	0.925794	0.633682	0.330706	0.264235	0.168822	0.099343	0.109199	0.110006	0.135799	0.13594	0.104149	0.066178	0.133543
10/12/2013 0:00	0.142074	0.16815	0.130299	0.108824	0.08481	0.102051	0.055568	0.127095	0.226292	0.482235	0.787081	0.805327	0.518678	0.361768	0.344909	0.379262	0.348448	0.326653	0.316614	0.222166	0.216553	0.196048	0.105739	0.145002
10/13/2013 0:00	0.146302	0.250781	0.296879	0.189303	0.304871	0.369347	0.280846	0.565888	1.895014	1.169732	1.311767	1.118288	0.85956	0.697249	0.756364	0.886644	0.573783	0.315798	0.221233	0.21361	0.223374	0	0.2562	0.269661
10/14/2013 0:00	0.322821	0.653507	1.286598	1.888807	1.159356	0.826745	1.094814	2.668045	0.82282	0.374388	0.264354	0.220232	0.197106	0.145034	0.161366	0.291113	0.074045	0.085424	0.113704	0.119298	0.123854	0.129874	0.192545	0.183699
10/15/2013 0:00	0.210452	0.138642	0.099899	0.138993	0.106821	0.088244	0.058612	0.065855	0.076164	0.130124	0.144463	0.161735	0.585701	0.163389	0.094569	0.096441	0.068683	0.061639	0.023201	0.054828	0.066882	0	0.109393	0.117576
10/16/2013 0:00	0.097564	0.133142	0.221046	0.236303	0.195247	0.235276	0.338363	0.477607	0.503548	0.514048	0.433633	0.277771	0.202176	0.219617	0.183663	0	0	0.160922	0.120422	0.122823	0.032243	0.060088	0.08116	0.053103
10/17/2013 0:00	0.063213	0.094489	0.084718	0.041403	0.068448	0.140078	0.142266	0.182745	0.244207	0.072228	0.033012	0.054172	0.090028	0.072059	0.078008	0.083653	0.060131	0.057246	0.010573	0.042706	0.048971	0	0.039821	0.055466
10/18/2013 0:00	0.109751	0.163138	0.128503	0.138829	0.129201	0.110747	0.153041	0.272638	0.295285	0	0	0.165078	0.186066	0.312015	0.280721	0.177474	0.151291	0.136691	0.145765	0.171673	0.156122	0.121737	0.150121	0.08219
10/19/2013 0:00	0.075243	0.158807	0.097008	0.057466	0.153564	1.822265	1.234352	0.421691	0.221988	0.09444	2.227199	2.102136	1.501988	0.398568	0.317386	0.240203	0.216854	0.174357	0.12845	0.126498	0.15598	0.083772	0.113457	0.121575
10/20/2013 0:00	0.119004	0.087388	0.075857	0.085895	0.086159	0.133473	0.112813	0.317779	0.539588	0.353258	0.251371	0.212246	0.161165	0.156267	0.167897	0.234439	0.190082	0.184056	0.233243	0.322188	0.200094	0	0.157375	0.07581
10/21/2013 0:00	0.565305	0.118992	0.196712	0.196476	0.641972	1.036472	1.293482	2.561762	1.895833	1.570047	0.917211	0.826254	1.296492	0.964757	1.002403	0.758356	0.661682	0.641035	0.730221	0.756727	0.584462	0.368736	0.294728	0.284554
10/22/2013 0:00	0.376611	0.450913	0.337328	0.224265	0.142805	0.160136	0.300247	0.611649	0.772498	2.06148	1.780756	1.014973	0.618564	0.393856	0.346592	0.216578	0.229749	0.339694	0.318806	0.274337	0.251236	0	0.292221	0.167559
10/23/2013 0:00	0.182041	0.242574	0.280381	0.148993	0.101864	0.118881	0.11567	0.157449	0.177749	0.182097	0.195176	0.252209	0.226769	0.191833	0.199398	0.262616	0.289645	0.28526	0.198966	0.157989	0.116317	0.106296	0.127219	0.126682
10/24/2013 0:00	0	0.062267	0.045408	0.061732	0.02948	0.056309	0.265769	1.31039	0.551765	0.395826	0.310973	0.436553	0.433527	0.519981	0.62048	0.761561	0.664328	0.619242	0.569636	0.352504	0.27406	0	0.439903	0.332301
10/25/2013 0:00	0.40743	0.408275	0.455772	0.325271	0.244783	0.18572	0.221417	0.577774	0.548218	0.690444	0.72444	0.71605	0.990277	0.95356	0.45558	0.292771	0.260505	0.205144	0.153996	0.154626	0.174413	0.259235	0.234813	0.305869
10/26/2013 0:00	0.295339	0.28243	0.222768	0.353315	0.723257	0.546802	0.388209	0.958058	0.614439	0.488311	0.465126	0.435664	0.407723	0.391321	0.365206	0.425076	0.418581	0.456174	0.596038	0.683485	0.572822	0.457506	0.359783	0.347399
10/27/2013 0:00	0.182365	0.212342	0.238859	0.387579	0.267302	0.275078	0.312145	0.432046	0.665481	2.228025	2.09562	1.335608	1.231988	0.952098	0.816362	0.796723	0.939073	1.483439	0.952337	0.684996	0.470955	0	0.430023	0.679635
10/28/2013 0:00	0.74667	0.743408	0.49103	0.846329	0.407935	0.403604	0.34388	0.478901	0.537644	0.615241	0.547711	0.621196	0.59777	0.534255	0.444932	0.547833	0.529107	0.491378	0.567915	0.387129	0.298417	0.210728	0.222514	0.282605
10/29/2013 0:00	0.512203	0.463667	0.536185	0.379337	0.16879	0.133133	0.166981	0.225232	0.329932	0.606637	0.731644	0.40819	0.402407	0.342828	0.312139	0.437296	0.511595	0.44054	0.304248	0.363882	0.418833	0	0.345792	0.204222
10/30/2013 0:00	0.159852	0.185522	0.188829	0.240398	0.172165	0.208315	0.247363	0.261447	0.295547	0.347455	0.419561	0.383339	0.372298	0.577943	1.114978	1.154149	1.188039	1.003605	0.538865	0.36744	0.249839	0.22411	0.344547	0.403028
10/31/2013 0:00	0.399663	0.293243	0.210879	0.093432	0.07681	0.257443	0.226902	0.164534	0.155715	0.145047	0.10728	0.095408	0.118896	0.130588	0.10591	0.11968	0.118294	0.17019	0.104726	0.071984	0.10061	0	0.055804	0.050335
11/1/2013 0:00	0.052064	0.076888	0.06146	0.089373	0.075489	0.096814	0.07524	0.101039	0.155038	0	0	0.264281	0.172925	0.121311	0.099019	0.10688	0.160255	0.223243	0.18788	0.207513	0.187713	0.147481	0.162219	0.264675
11/2/2013 0:00	0.204332	0.137383	0.09876	0.087836	0.088283	0.099964	0.113327	0.292509	0.387867	0.952519	0.898485	0.45421	0	0.042433	0.031573	0.048983	0.045753	0.078464	0.048765	0.032942	0.101204	0.077889	0.087173	0.115214
11/3/2013 0:00	0.127944	0.072049	0.065722	0.045709	0.057951	0.029481	0.052982	0.073007	0.092279	0.16015	0.19951	0.19325	0.128319	0.121832	0.122219	0.212389	0.310544	0.181843	0.142944	0.13962	0.140286	0	0.288488	0.152524
11/4/2013 0:00	0.075003	0.082286	0.107427	0.096007	0.096148	0.075638	0.088723	0.172853	0.249037	0.376178	0.471543	0.342239	0.287901	0.26067	0.343196	0.35806	0.263996	0.186518	0.129686	0.146818	0.136395	0.117505	0.159363	0.13625
11/5/2013 0:00	0.130202	0.101115	0.057746	0.074155	0.085058	0.101455	0.103341	0.119115	0.11707	0.2338	0.256722	0.316463	0.306361	0.312068	0.269849	0.241795	0.257812	0.209282	0.206439	0.178995	0.165271	0	0.209703	0.139875
11/6/2013 0:00	0.130841	0.055038	0.084669	0.098333	0.09249	0.089008	0.113369	0.1363	0.158329	0.193088	0.280941	0.339656	0.29733	0.188169	0.188482	0.176321	0.123187	0.147673	0.09366	0.041676	0.131181	0.121279	0.088525	0.081685
11/7/2013 0:00	0.06741	0.039636	0.042484	0.040233	-0.00063	0.06767	0.042188	0.076232	0.089336	0.098859	0.091148	0.068052	0.059918	0.084251	0.110295	0.12033	0.124003	0.073858	0.060106	0.088882	0.044189	0	0.194254	0.062263
11/8/2013 0:00	0.075995	0.128319	0.13996	0.170687	0.183286	0.173756	0.065909	0.080477	0.299985	0.699968	0	0	1.04099	0.909245	0.809129	0.646245	0.547526	0.514337	0.743362	0.824357	0.782507	0.752943	0.681189	1.198222
11/9/2013 0:00	0.717003	0.505356	0.411956	0.291171	0.372395	0.287611	0.25692	0.330654	0.379816	0.406245	0.521095	0.465949	0.428803	0.392939	0.331187	0.279403	0.159818	0.063496	0.107998	0.143027	0.268884	0.583229	0.365909	0.277277
11/10/2013 0:00	0.274156	0.319298	0.530014	0.370815	0.450995	0.347739	0.227499	0.30778	0.584349	1.570402	1.203364	0.858852	0.724309	0.565953	0.694007	0.630659	0.478241	0.595304	0.523201	0.394157	0.39483	0	0.400465	0.224635
11/11/2013 0:00	0.413721	0.969944	1.304027	1.09246	0.895839	0.880266	0.744944	0.633839	3.114454	8.129761	6.821517	4.080023	2.244319	8.859964	2.415072	0.337452	0.38367	0.887911	0.918342	0.769631	0.740554	0.582749	0.684829	0.910528
11/12/2013 0:00	0.644194	0.460846	0.403099	0.369085	3.14627	0.652103	0.415475	0.40346	0.662611	1.416505	1.135787	0.454557	0.326189	0.219989	0.150075	0.1642	0.216857	0.251383	0.159542	0.21964	0.266547	0	0.743751	0.61602
11/13/2013 0:00	0.509393	0.367957	0.282424	0.267177	0.368655	0.369449	0.419564	0.860336	1.111784	1.228078	0.737812	0.585728	0.863502	0.791572	0.60718	0.26424	0.232048	0.197854	0.262453	0.951929	0.547339	0.68808	0.423197	0.498034
11/14/2013 0:00	0.519949	0.851082	1.315209	1.907239	0.748736	0.352982	0.454911	0.772456	1.044407	0.932902	0.712098	0.531432	0.463525	0.44465	0.464614	0.561676	0.745909	0.640499	0.559113	0.436835	0.372826	0	0.331179	0.260315
11/15/2013 0:00	0.180107	0.305298	0.238953	0.3927	0.465798	0.492802	0.500862	0.446131	0.434781	0.386879	0.314616	0.169809	0.127469	0.122616	0.097783	0.117042	0.06588	0.215863	0.402107	0.374908	0.211047	0.190381	0.120627	0.141216
11/16/2013 0:00	0.148341	0.158158	0.116747	0.06711	0.090153	0.147101	0.229844	0.154113	0.164685	0.12095	0.207867	0.158146	0.0986	0.052617	0.140574	0.144149	0.097213	0.072955	0.123057	0.097315	0.072623	0.108268	0.105065	0.123861
11/17/2013 0:00	0.146387	0.119097	0.174623	0.194693	0.177978	0.172799	0.165554	0.153958	0.14821	0.215036	0.173748	0.176798	0.143634	0.111673	0.12513	0.202583	0.222072	0.189491	0.161587	0.146157	0.164199	0	0.112738	0.104556
11/18/2013 0:00	0.127034	0.163833	0.213648	0.119393	0.092469	0.109363	0.021637	0.098092	0.161049	0.339604	0.415285	0.462674	0.472536	0.32894	0.296302	0.149317	0.136269	0.113297	0.14015	0.174366	0.244087	0.357459	0.523797	0.708606
11/19/2013 0:00	0.704986	0.425275	0.352752	0.309248	0.334654	0.39928	0.489608	0.719684	1.001348	1.255255	1.260204	1.118136	0.933293	0.836138	0.879823	0	0.815669	0.339327	0.44738	0.450966	0.494837	0	0.315505	0.485619
11/20/2013 0:00	0.805637	0.875695	2.120784	4.706823	5.332217	2.711237	1.834543	1.11428	0.951046	0.932197	0.78377	0.650486	0.529482	0.370747	0.364026	0.401108	0.293382	0.243174	0.310678	0.230633	0.107699	0.182608	0.080946	0.210289
11/21/2013 0:00	0.282989	0.547918	0.608531	0.537321	0.382748	0.07509	0.254508	0.173161	0.271246	0.29712	0.257961	0.220482	0.13391	0.162621	0.218097	0.294378	0.391125	0.408489	0.360053	0.29106	0.18667	0	0.096986	0.148643
11/22/2013 0:00	0.278072	0.292837	0.24358	0.19157	0.135494	0.117602	0.111688	0.050948	0.079542	0.131186	0.351221	0	0	0	0	0	0	0.240508	0.098463	0.141842	0.161089	0.397633	0.187652	0.403684
11/23/2013 0:00	0.547996	0.315171	0.029847	0.067909	0.025576	0.04954	0.034243	0.052786	0.233816	0.14371	0.105926	0.142264	0.118436	0.066202	0.135237	0.055031	0.02814	0.136079	0.258962	0.284614	0.636354	1.165251	1.215113	1.119929
11/24/2013 0:00	0.858606	0.679768	0.580141	0.954695	0.961654	0.894119	0.874147	0.553661	0.57845	0.695272	0.697408	0.663606	0.598838	0.57116	0.546743	0.458898	0.653508	0.832377	0.674574	0.593668	0.776766	0	0.964956	2.551499
11/25/2013 0:00	2.055862	8.007534	4.819839	1.304027	0.613571	0.536102	0.524373	0.406356	0.23419	0.187138	0.126276	0.163812	0.236963	0.298218	0.346989	0.456099	0.483	0.56379	0.793418	0.780639	0.495859	0.398303	0.519469	0.769722
11/26/2013 0:00	1.069213	0.100458	0.094622	0.131533	0.071833	0	0.007029	0	0	0	0	0	0	0	0	0	0	0	0	0	0	0	0	0
11/27/2013 0:00	0	0	0	0	0	0	0	0	0	0.05997	0.055964	0.148326	0.098444	0.107988	0.086081	0.081536	0.071141	0.043763	0.153098	0.2675	0.257315	0.171715	0.153652	0.099571
11/28/2013 0:00	0.118285	0.093821	0.100706	0.053836	0.032448	0.036335	0.002492	0.089828	0.121959	0.175274	0.210108	0.195218	0.159887	0.142954	0.126392	0.131746	0.110581	0.093711	0.089725	0.118509	0.076257	0	0.115447	0.077176
11/29/2013 0:00	0.028548	0.040878	0.042773	0.074254	0.059095	0.0373	0.036014	0.148001	0.519923	0.664541	0.689098	0.724254	0.644997	0.534073	0.6214	0.760379	0.3526	0.084865	0.251798	0.408432	0.420786	0.494136	0.488657	0.426714
11/30/2013 0:00	0.224604	0.622297	0.577571	0.297181	0.327472	0.319484	0.200589	0.418836	0.691879	1.088499	1.20549	1.191858	0.94927	0.748635	0.686958	0.572709	0.471892	0.324608	0.291973	0.370203	0.210607	0.133517	0.158634	0.170738
2nd Highest =	**1.71**	**1.68**	**2.12**	**1.91**	**3.15**	**1.82**	**1.49**	**2.67**	**3.52**	**6.25**	**3.34**	**3.64**	**2.24**	**2.56**	**1.74**	**1.37**	**1.52**	**1.48**	**1.32**	**1.19**	**0.98**	**1.17**	**1.22**	**2.52**

Centrevill, AL SEARCH Monitor - 2014 Hourly SO2 Data (ppb)

	##########	1:00:00 AM	2:00:00 AM	3:00:00 AM	4:00:00 AM	5:00:00 AM	6:00:00 AM	7:00:00 AM	8:00:00 AM	9:00:00 AM	##########	##########	##########	1:00:00 PM	2:00:00 PM	3:00:00 PM	4:00:00 PM	5:00:00 PM	6:00:00 PM	7:00:00 PM	8:00:00 PM	9:00:00 PM	##########	##########
1/1/2014 0:00	0.36474	0.326746	0.389699	0.393442	0.373792	0.397386	0.277601	0.500934	0.963267	1.033949	0.90967	0.732537	0.706838	0.364687	0.225716	0.203439	0.162958	0.312197	0.236317	0.220415	0.243933	0.235305	0.211569	0.212717
1/2/2014 0:00	0.152649	0.171144	0.257035	0.227095	0.144752	0.189938	0.240839	0.143661	0.101491	0.076399	0.145054	0.178863	0.09799	0.120991	0.276239	0.280834	0.222493	0.103202	0.204809	0.295868	0.345412	0	0.425529	0.345776
1/3/2014 0:00	0.240968	0.22758	0.222979	0.192387	0.256558	0.256273	0.310977	0.297186	0.377367	0.441713	0.557759	0.484662	0.513915	0.592459	0.711708	0.846666	0.890241	0.767668	0.87008	0.98358	0.924531	0.745498	0.840644	0.616892
1/4/2014 0:00	0.45075	0.371127	0.299047	0.291377	0.339327	0.370368	0.303043	0.342517	0.397739	0.527517	0.678774	0.842582	0.796558	0.620035	0.528925	0.376433	0.360141	0.248058	0.247828	0.237865	0.231364	0.123526	0.10254	0.09023
1/5/2014 0:00	0.065677	0.072329	0.052385	0.077802	0.063783	0.077615	0.109688	0.107521	0.187732	0.165194	0.142797	0.181143	0.162504	0.115095	0.113197	0.18127	0.237847	0.26261	0.24443	0.143654	0.137434	0	0.154551	0.111001
1/6/2014 0:00	0.105551	0.098442	0.12826	0.259142	0.198575	0.215543	0.154978	0.158349	0.265348	0.239026	0.188827	0.224458	0.290194	0.220328	0.146695	0.119364	0.05473	0	0.047662	0.260012	0.291004	0.313587	0.350834	0.433792
1/7/2014 0:00	0.380385	0.345066	0.242055	0.128736	0.098909	0.071205	0.086581	0.132691	0.404433	0.8435	0.890701	0.669923	0.452771	0.214982	0.205513	0.30084	0.391621	0.383649	0.593607	1.400655	1.509002	0	0.693418	0.323263
1/8/2014 0:00	0.314587	0.073959	0.088286	0.061829	0.081684	0.478679	0.809959	0.856304	0.937807	2.129071	0	1.353834	0.738567	0.438916	2.075823	8.943413	7.159013	2.063306	1.55219	0.847518	0.784578	1.276597	0.96155	1.306447
1/9/2014 0:00	1.044048	1.109405	1.038169	1.657115	2.373574	4.46656	4.236043	3.383137	2.471202	1.665017	1.540152	1.025977	0.733212	0.523167	0.44839	0.235336	0.10106	0.029636	0.114899	0.061199	0.028852	0	0.064546	0.016843
1/10/2014 0:00	0.026891	0.02695	0.001585	0.059336	0.032051	0.019168	0.017989	0.119866	0.084991	0.136143	0.111791	0.146887	0.128061	0.142438	0.124629	0.159601	0.164839	0.158672	0.157271	0.105169	0.112735	0.102894	0.083869	0.107846
1/11/2014 0:00	0.110154	0.133422	0.125433	0.076255	0.068749	0.152165	0.159135	0.060532	0.08685	0.105548	0.143996	0.091379	0.071161	0.03773	0.154903	0.113501	0.091916	0.079593	0.034106	0.088852	0.107529	0.03723	0.021899	0.021008
1/12/2014 0:00	0.004921	0.071565	0.111068	0.143926	0.077882	0.130109	0.189092	0.197437	0.245612	0.303071	0.371532	0.583943	0.501288	0.322633	0.301705	0.299641	0.20719	0.214637	0.359362	0.559255	0.590967	0	0.059506	0.096586
1/13/2014 0:00	0.310533	0.320925	0.191871	0.203271	0.296478	0.590429	0.594604	0.554428	0.488431	0.361934	0.30272	0.186272	0.089194	0.062818	0.155424	0.117204	0.110855	0.158063	0.125169	0.118169	0.166766	0.106586	0.134283	0.133171
1/14/2014 0:00	0.158658	0.105371	0.079982	0.14064	0.111989	0.147246	0.059915	0.105749	0.06813	0.311482	0.330478	0.201563	0.24608	0.290837	0.277496	0.185799	0.201278	0.099051	0.273792	1.046364	0.645161	0	0.459357	0.235193
1/15/2014 0:00	0.295239	0.245097	0.114009	0.097351	0.09878	0.167916	0.111453	0.085799	0.119713	0.194261	0.320485	0.328563	0.28358	0.220819	0.091056	0.062605	0.109791	0.160812	0.15962	0.136524	0.159353	0.263758	0.309904	0.241447
1/16/2014 0:00	0.192867	0.086129	0.091807	0.107271	0.098141	0.075308	0.086278	0.093548	0.121296	0.281319	12.24254	3.11788	1.874999	0.895536	0.724039	0.653829	0.525636	0.330917	0.235069	0.240238	0.337537	0	1.266493	1.3537
1/17/2014 0:00	1.377728	1.297814	2.031615	2.478874	1.761787	0.876119	0.635817	0.468792	0.444921	0.348414	0.295686	0.218701	0.28479	0.262287	0.248256	0.216315	0.184563	0.112227	0.428427	0.158614	0.183138	0.187506	0.160825	0.357843
1/18/2014 0:00	0.306512	0.123621	0.051562	0.102848	0.124888	0.066052	0.102648	0.100683	0.150397	0.226565	0.368731	2.637907	4.303802	0.83944	0.468867	0.248226	0.385675	0.389585	0.422226	0.407191	0.560613	2.361928	2.634265	2.649575
1/19/2014 0:00	2.653181	2.781807	3.282908	2.11147	1.06442	0.816321	0.684673	0.612664	0.592829	0.448675	0.359405	0.267848	0.571743	1.058093	0.836791	0.253296	0.2204	0.168778	0.224837	0.190214	0.146312	0	0.143913	0.10255
1/20/2014 0:00	0.1492	0.419772	0.363016	0.258082	0.293452	0.505245	0.378575	0.38251	0.468569	0.531507	0.736494	0.92663	1.472428	1.789123	1.60067	4.29404	0.77964	0.929469	0.952982	0.640224	0.603981	0.893204	1.507289	1.979105
1/21/2014 0:00	3.126523	6.0271	5.431266	3.169725	1.946736	0.922117	1.245852	1.422553	1.434837	0.941439	0.475053	0.219786	0.192268	0.146744	0.059283	0.242984	0.392863	0.280319	0.228422	0.198439	0.186051	0	0.159156	0.174364
1/22/2014 0:00	0.239744	0.51316	0.710575	0.587739	0.581945	0.393287	0.317451	0.291156	0.387336	0.784449	0.709499	0.705182	0.38121	0.167486	0.219114	0.292539	0.254375	0.245979	0.273608	0.349636	0.343102	0.411762	0.47576	0.611794
1/23/2014 0:00	0.699745	0.84416	0.808187	0.815019	0.52781	0.396386	0.332873	2.201847	5.264775	3.851657	3.790168	1.409277	1.34783	0.758557	0.537611	0.448399	0.463438	0.237265	0.251625	0.358228	0.465273	0	0.359039	0.890946
1/24/2014 0:00	2.152954	1.606294	1.107927	0.339419	0.345392	0.352487	0.464372	0.50734	0.553437	0.773131	1.021996	1.186044	1.009594	0.836237	0.807064	0.504087	0.473805	0.638355	0.667001	0.431255	0.416448	0.434162	0.505696	0.730661
1/25/2014 0:00	0.737852	1.260686	1.764489	1.798787	1.174506	2.464726	2.608625	4.123152	7.815467	7.203544	6.567568	7.76172	1.567863	1.282171	1.198672	1.176034	0.94534	0.757026	0.667204	0.539519	0.796396	0.962201	0.860938	0.613134
1/26/2014 0:00	0.577617	0.6305	0.48	0.470785	0.474941	0.613331	0.49888	0.446315	0.510267	0.857995	1.230319	2.909647	2.077664	1.017224	0.763088	0.83674	0.950692	0.973657	1.044336	1.031556	0.961915	0	1.508583	1.775247
1/27/2014 0:00	1.546031	1.371603	1.380136	1.26058	1.185844	1.212775	1.099093	1.371336	2.535017	2.093503	2.415539	2.560617	2.259248	2.503466	3.339772	3.118112	2.967306	3.175476	3.241537	1.526385	1.3745	1.304206	0.996269	0.889975
1/28/2014 0:00	0.832602	1.236391	1.453342	1.69857	1.767849	1.977965	2.181641	2.143861	1.870167	1.697625	1.172623	0	1.067007	1.571081	1.438704	0.927384	0.634116	0	0.806863	0.776297	0.934914	0	1.168786	0.845183
1/29/2014 0:00	1.1293	2.478776	4.379947	4.440052	4.27793	4.944099	5.398268	4.560944	3.442613	2.646487	2.435428	2.12305	2.057366	1.678015	1.503217	1.666327	2.638344	5.240863	3.809348	2.312206	2.51171	2.587435	2.027605	1.738068
1/30/2014 0:00	1.353912	1.005193	0.989336	1.228002	1.310228	0.373438	0.415711	1.598731	1.363304	1.770096	4.59764	4.612972	3.436434	3.144366	3.135006	1.499692	1.972533	2.162168	1.62279	1.791588	1.418355	0	0.842628	1.179662
1/31/2014 0:00	1.760889	0.730959	0.42119	0.470005	0.824914	0.572002	0.330912	0.384136	0.339353	0.718803	0.84656	0.97192	0.808656	0.472455	0.43178	0.382729	0.490121	0.53824	0.777824	1.079444	1.406427	1.606092	1.95654	1.535145
2/1/2014 0:00	1.120513	1.184245	1.032346	0.794826	0.859413	0.882217	0.813524	0.807602	0.977147	1.312161	0.717898	0.570529	0.576123	0.479032	0.396691	2.604887	4.158072	2.17325	0.532157	0.319313	0.286174	0.729763	0.6998	0.505148
2/2/2014 0:00	0.493972	0.30165	0.206258	0.165501	0.125127	0.149013	0.133865	0.046643	0.068103	0.047136	0.09044	0.164814	0.123413	0.160204	0.061815	0.062209	0.081698	0.053262	0.074882	0.036572	0.028077	0	0.071052	0.021605
2/3/2014 0:00	0.047942	0.038935	0.051619	0.111621	0.144957	0.050351	0.016867	0.044243	0.122618	0.093487	0.045188	0.032414	0.043704	0.106838	0.066967	0.041574	0.057764	0.047468	0.032079	0.058576	0.107455	0.25429	0.107757	0.080481
2/4/2014 0:00	0.116544	0.238494	0.238568	0.323892	0.819011	1.060543	1.367293	1.096007	1.966785	0.726143	0.555001	0.512934	0.442615	0.373825	0.343209	0.261682	0.152638	0.036665	0.013919	0.028629	0.002507	0	0.051669	0.056498
2/5/2014 0:00	0.098372	0.149331	0.147636	0.141727	0.091992	0.113505	0.102804	0.051973	0.013884	0.04233	0.042386	0.036476	0.025792	0.078517	0.099426	0.123441	0.147464	0.12168	0.131487	0.263188	0.31438	0.228864	0.36227	0.218409
2/6/2014 0:00	0.200693	0.341283	0.559671	0.695432	0.556505	0.656198	0.600603	0.55396	0.862424	0.933281	0.803765	0.857119	0.917255	0.807351	0.918195	0.905898	0.79177	0.511263	0.350375	0.506327	0.574747	0	0.333096	0.344472
2/7/2014 0:00	0.427622	0.456018	0.404803	0.411437	0.47645	0.48894	0.412757	0.568978	0.791238	0	0	1.418125	1.276748	1.155772	0.935321	0.78968	0.602951	0.448851	0.448587	0.510201	0.472318	0.496068	0.465912	0.546788
2/8/2014 0:00	0	0	0	0	0	0	0	0	0	0	0	0	0	0	0	1.914953	2.308131	0.85734	0.429607	0.265997	0.313385	0.39623	0.406224	0.314195
2/9/2014 0:00	0.389878	0.400958	0.363014	0.436708	0.240447	0.058984	0.24723	1.032452	1.158617	1.169798	1.963329	3.72032	2.021876	1.741732	1.701537	1.270791	7.241451	2.817797	0.648197	0.507906	0.497393	0	0.522002	0.515837
2/10/2014 0:00	0.519198	0.660678	0.811489	1.38122	1.298316	1.155322	0.65233	0.357686	0.325112	1.631186	3.076174	1.837197	1.087173	0	0	0.007787	0.122503	0	0	0.354389	0.225387	0.166623	0.134141	0.074031
2/11/2014 0:00	0.099231	0.041767	0.037659	0.058435	0.081705	0.027581	0.073737	0.042328	0.048016	0.046832	0.051479	0.087953	0.080218	0.063934	0.056303	0.03132	0.064875	0.045543	0.08194	1.165649	2.144371	0	0.89384	0.480694
2/12/2014 0:00	0.189365	0.070777	0.089205	0.107772	0.097543	0.108803	0.085067	0.095655	0.063726	0.072487	0.032001	0.018187	0.008094	0.020142	0.022744	0.069518	0.511195	0.810895	0.235581	0.091238	0.055625	0.069609	0.101033	0.038514
2/13/2014 0:00	0.05989	0.308075	0.310747	0.017058	0.045751	0.162006	0.242253	0.447245	0.683195	0.843797	0.874933	0.852137	0.646596	0.640235	0.495964	0.396034	0.374293	0.389736	0.318382	0.31067	0.292988	0	0.263806	0.230366
2/14/2014 0:00	0.284253	0.278884	0.242919	0.135738	0.16579	0.237303	0.233546	0.247683	0.4804	2.543899	4.05774	2.98135	1.48007	1.474643	1.003952	1.0731	0.850453	0.713473	0.779221	1.44786	0.452234	0.223859	0.1689	0.120868
2/15/2014 0:00	0.077585	0.047884	0.075997	0.105745	0.1318	0.108094	0.137296	0.135429	0.15834	0.124099	0.091499	0.129941	0.215859	0.181444	0.227537	0.260621	0.256363	0.102117	0.124648	0.150483	0.123725	0.596331	0.47099	1.261492
2/16/2014 0:00	0.789751	1.302252	1.169253	0.749577	0.656962	0.373466	0.23492	0.367446	0.505559	0.757466	1.380538	1.019794	1.003168	1.174313	1.272393	1.481321	1.484302	1.375382	1.530014	2.26905	1.60378	0	0.854358	0.660765
2/17/2014 0:00	0.669421	0.612313	0.508148	1.45486	0.825108	0.857317	1.069113	1.042822	0.916576	0.62605	0.546606	0.919284	1.076918	0.838441	0.703744	0.35909	0.21008	0.331531	0.512303	0.481269	0.494196	0.438139	0.361623	0.404155
2/18/2014 0:00	0.633343	0.786873	0.351094	0.173437	0.160751	0.11541	0.095882	1.510543	1.607797	0.506921	0.399837	0.376862	0.414243	0.378237	0.376927	0.297655	0.264623	0.195438	0.143795	0.133667	0.120964	0	0.433587	0.744262
2/19/2014 0:00	0.697416	0.568565	0.758589	0.560956	0.528509	0.417603	0.226283	0.145343	0.154871	0.538742	0	0	1.66627	2.132507	1.319311	0.133532	0.181207	0.218474	0.169601	0.138775	0.146996	0.264447	0.270637	0.164564
2/20/2014 0:00	0.230673	0.1508	0.126283	0.122733	0.065304	0.051666	0.07663	0.071673	0.062254	0.039357	0.076348	0.094331	0.135875	0.177819	0.231809	0.277897	0.156276	0.100092	0	0.073108	0.100427	0	0.052906	-0.00338
2/21/2014 0:00	0.003927	0.005911	-0.01128	0.041284	0.019206	0.006849	-6.6E-05	0.054938	0.054302	0.123517	0.11081	0.1251	0.109561	0.091427	0.062961	0.082702	0.087505	0.099716	0.134115	0.125234	0.128161	0.138399	0.150377	0.185561
2/22/2014 0:00	0.113896	0.115553	0.130209	0.107239	0.08358	0	0	0.226969	1.927485	2.25506	1.564839	17.61793	0.894343	0.130986	0.126857	0.124559	0.170815	1.404736	1.047702	0.679954	0.656058	0.717	0.778273	0.860098
2/23/2014 0:00	0.75912	0.70119	0.765739	0.833355	0.566747	0.336536	0.239295	0.639114	0.675076	1.300695	2.588671	4.358006	3.441637	3.088678	1.873371	3.37104	2.287499	0.657147	0.393126	0.282732	0.107219	0	0.902332	0.242438
2/24/2014 0:00	0.213447	0.667735	1.118804	1.284136	1.43819	0.995258	0.633662	0.542443	0.590119	0.718753	0.683128	0.640312	0.685041	0.634254	0.331821	0.395348	0.26401	0.236906	0.229393	0.298528	0.377001	0.333876	0.436248	0.536619
2/25/2014 0:00	0.48712	0.335327	0.237147	0.303464	0.31723	0.603479	0.497195	0.160626	0.746559	0.590445	0.462825	0.383274	0.476662	1.77598	1.597824	2.434104	2.213045	1.593937	1.016991	0.750392	0.63823	0	0.298572	0.421191
2/26/2014 0:00	0.271273	0.202194	0.153344	0.187218	0.140276	0.296976	0.398707	1.093443	1.284713	1.067806	0.971213	0	1.233719	0	0.744874	0.375964	0.15451	0.131033	0.102611	0.157903	0.401059	0.311938	0.259721	0.229419
2/27/2014 0:00	0	0	0	0	0	0	0	0	0	0.431578	0.405895	0.412097	0.416794	0.602144	0.54089	0.51369	0.471045	0.419055	0.422153	0.40966	0.359196	0	0.659116	0.3207
2/28/2014 0:00	0.280612	0.169348	0.19687	0.101905	0.018443	0.074235	0.310831	1.579432	2.636264	1.256503	0.751583	0.518492	0.368724	1.155574	1.734066	0.761415	1.916354	1.748464	0.901819	0.898503	0.850807	0.623027	0.534073	0.808589
12/1/2014 0:00	0.188252	0.135782	0.112419	0.110532	0.075508	0.04424	0.060465	0.059191	0.089845	0.097898	0.170047	0.201103	0.194705	0.189842	0.244106	0.139219	0.117092	0.211093	0.291122	0.137735	0.098626	0.072489	0.137415	0.030157
12/2/2014 0:00	0.066885	0.218315	0.34908	0.356586	0.343976	0.220372	0.174537	0.232057	0.339694	1.434538	3.207795	2.166489	0.711882	0.596702	0.661758	1.095365	1.075478	1.229556	0.37728	0.33638	0.569982	0	0.250737	0.310907
12/3/2014 0:00	0.209186	0.182161	0.116528	0.123587	0.145245	0.143717	0.140639	0.21427	0.274227	0.454312	0.941294	1.543953	1.27435	1.083236	1.096409	1.057531	0.958056	1.036786	0.894661	0.7909	0.595286	0.590641	0.485856	0.389009
12/4/2014 0:00	0.768082	0.927858	0.641395	4.007826	18.08463	22.32425	18.04285	14.08685	9.690726	5.591079	3.558028	1.657967	1.096413	0.679763	0.367619	0.271131	0.197522	0.184233	0.149773	0.180319	0.140106	0	0.198209	0.894372

Centrevill, AL SEARCH Monitor - 2014 Hourly SO2 Data (ppb)

	##########	1:00:00 AM	2:00:00 AM	3:00:00 AM	4:00:00 AM	5:00:00 AM	6:00:00 AM	7:00:00 AM	8:00:00 AM	9:00:00 AM	##########	##########	##########	1:00:00 PM	2:00:00 PM	3:00:00 PM	4:00:00 PM	5:00:00 PM	6:00:00 PM	7:00:00 PM	8:00:00 PM	9:00:00 PM	##########	##########
12/5/2014 0:00	0	0	0	0	0	0	0	0	0.502302	0.559667	0.500177	0.773202	0.896678	0.377159	0.249896	0.240373	0.219751	0.240089	0.202102	0.19075	0.234678	0.345528	0.375783	0.382283
12/6/2014 0:00	0.435363	0.376399	0.18139	0.125124	0.138214	0.071449	0.080225	0.106589	0.162015	0.079832	0.070482	0.139813	0.11294	0.113368	0.155516	0.191705	0.370536	0.244777	0.191392	0.271579	0.167166	0.169261	0.19209	0.268816
12/7/2014 0:00	0.284731	0.173124	0.150064	0.051256	0.06733	0.130727	0.146715	0.177921	0.232873	0.38621	0.37866	0.578054	0.544412	0.436133	0.554871	0.452355	0.526535	0.182012	0.159242	0.08462	0.142393	0	0.340329	3.669122
12/8/2014 0:00	7.091233	6.228182	4.260995	1.7488	1.199554	0.53588	0.430815	0.417461	0.440272	0.375543	0.356103	0.369265	0.367407	0.296922	0.174004	0.139381	0.226552	0.226201	0.227276	0.154786	0.135055	0.114636	0.133176	0.121474
12/9/2014 0:00	0.290221	0.366097	0.28562	0.194563	0.455422	0.428831	0.475566	0.478557	0.531707	0.909379	1.146525	0.698163	0.433402	0.287902	0.231193	0.231472	0.313722	0.265425	0.833356	0.427057	0.49764	0	0.32346	0.3132
12/10/2014 0:00	0.287981	0.298543	0.307445	0.292286	0.336985	0.331248	0.308642	0.414009	0.580596	0.592923	0.960407	0.498629	0.527231	0.518976	0.476435	0.533474	0.333662	0.21651	0.278704	0.370822	0.361345	0.26695	0.257431	0.247566
12/11/2014 0:00	0	0	0	0	0	0	0	0.156645	0.495823	1.116712	1.223	1.184829	1.222021	1.157774	1.154248	1.241728	1.257238	1.276016	1.23062	1.015636	2.071208	0	1.63799	1.082089
12/12/2014 0:00	0.875634	0.744261	0.805135	0.994807	1.165424	2.397044	2.861199	1.443542	1.274298	1.326044	1.57401	1.39792	1.28568	1.060632	1.147967	1.202105	1.188621	1.05385	0.971639	0.84569	1.056718	1.052682	1.088138	1.374371
12/13/2014 0:00	1.855495	2.915375	2.459659	1.376261	1.203846	1.110643	1.036764	1.099422	1.460207	2.086388	1.820647	0.943392	0.669564	0	0.776465	0.461654	0.395044	0.371799	0.367267	0.316734	0.339385	0.329918	0.420495	0.287482
12/14/2014 0:00	0.18935	0.241399	0.270123	0.285743	0.31511	0.306985	0.339061	0.402506	0.548043	0.504009	0.320563	0.17441	0.130701	0.059491	0.037209	0.071187	0.091102	0	0.044666	0.057676	0.078414	0	0.144681	0.114875
12/15/2014 0:00	0.049855	0.035782	0.055541	0.089915	0.462062	9.82427	15.85668	10.18382	7.706114	5.237391	3.300693	1.502756	0.84958	0.477996	0.40509	0.339751	0.289648	0.28718	0.264658	0.276181	0.331918	0.373207	0.364992	0.296702
12/16/2014 0:00	0.282391	0.262817	0.214495	0.141182	0.099606	0.057765	0.077213	0.025413	0.041625	0.046757	0	0	0	0.041428	0.053023	0.023179	0.049025	0.034255	0.025569	0.061206	0.03985	0	0.055241	0.115029
12/17/2014 0:00	0.057716	0.070212	0.086024	0.079491	0.056352	0.04682	0.03737	0.069301	0.066537	0.043267	0.010753	0.072564	0.069296	0.01035	0.023718	0.105957	0.084401	0.058545	0.020071	0.010885	0.023431	0.053772	0.099942	0.100001
12/18/2014 0:00	0.094342	0.201107	0.249177	0.397856	0.374702	0.111886	0.045923	0.075646	0.207866	0.720388	1.925792	2.67776	2.416234	2.091388	1.853354	1.38816	0.697372	0.354754	0.35017	0.401806	0.268425	0	0.10626	0.221659
12/19/2014 0:00	0.213254	0.129451	0.124209	0.128369	0.149907	0.404217	0.600826	1.022428	1.412048	1.465528	1.512675	4.433816	5.410055	8.685432	7.80594	3.622907	2.163899	1.248653	0.800149	0.385748	0.261028	0.24803	0.313424	0.515474
12/20/2014 0:00	0.702253	0.780789	0.728139	0.569427	0.449124	0.39685	0.366208	0.335676	0.41562	0.616346	0.89361	0.795568	0.657777	0.665764	0.662846	0.678477	0.615829	0.368383	0.365761	0.359348	0.638697	0.749422	0.432961	0.437405
12/21/2014 0:00	0.41248	0.283784	0.193672	0.238338	0.58997	0.892972	0.906708	0.779487	0.922576	1.611244	1.289845	0.593086	0.378156	0.168002	0.059928	0.003331	0.039769	0.049089	0.121056	0.433698	0.538685	0	0.319753	0.180661
12/22/2014 0:00	0.100789	0.037212	-0.00657	0.065196	0.157524	0.198527	0.141086	0.133035	0.103755	0.112432	0.143225	0.126243	0.13729	0.134736	0.133608	0.056592	0.054818	0.059864	0.060073	0.081749	0.071064	0.055894	0.164338	0.050022
12/23/2014 0:00	0.073839	0.036619	0.067883	0.07655	0.09061	0.079533	0.092808	0.136182	0.124918	0.164552	0.160709	0.162043	0.169245	0.180132	0.216231	0.149753	0.058116	0.049231	0.010629	0.026095	0.037806	0	0.113205	0.224765
12/24/2014 0:00	0.145033	0	0	0	0	0	0	0.221096	0.194341	0.153407	0.151353	0.223384	0.225822	0.123637	0.08731	0.025634	0.013997	0.036948	-0.01174	0.032279	0.022698	0.014126	0.051931	0.020435
12/25/2014 0:00	0.046648	0.027715	0.062045	0.073316	0.065453	0.091782	0.094263	0.108682	0.156687	0.360459	0.336755	0.268784	0.249302	0.201073	0.190769	0.171812	0.152274	0.147418	0.098895	0.104974	0.083236	0	0.060392	0.046089
12/26/2014 0:00	0.078505	0.094565	0.109716	0.112756	0.105385	0.100461	0.374705	1.111223	1.572674	2.453336	2.552072	1.240005	0.78588	0.470244	0.37122	0.260967	0.224835	0.190161	0.177389	0.255483	0.144613	0.426946	0.564328	0.592733
12/27/2014 0:00	0.437238	0.514283	0.723776	0.761438	0.735152	0.394684	0.308924	0.374582	0.32526	0.473012	0.541085	0.626785	0.523421	0.527753	0.28441	0.156458	0.140638	0.112796	0.123932	0.076967	0.102382	0.056481	0.102767	0.0745
12/28/2014 0:00	0.123855	0.141225	0.189971	0.190498	0.270632	0.260202	0.157452	0.097285	0.084124	0.108775	0.141941	0.121451	0.130902	0.101831	0.047313	0.043137	0.088553	0.114883	0.117221	0.10282	0.111085	0	0.096774	0.109708
12/29/2014 0:00	0.133873	0.194673	0.223224	0.213508	0.220587	0.226509	0.29241	0.363473	0.366337	0.477487	0.546729	0.425458	0.336491	0.240838	0.225416	0.226374	0.235906	0.313884	0.326208	0.310246	0.307744	0.253614	0.272842	0.248104
12/30/2014 0:00	0.296764	0.384465	0.389622	0.400856	0.406361	0.38431	0.392054	0.390107	0.32418	0.263831	0.212777	0.224559	0.179339	0.256795	0.279714	0.222769	0.179924	0.168333	0.244716	0.284953	0.295891	0	0.254213	0.17579
12/31/2014 0:00	0.237881	0.216321	0.329373	0.277976	0.23675	0.234419	0.236775	0.339188	0.290603	0.374922	0.526523	0.650099	0.6736	0.471441	0.393125	0.238704	0.18067	0.052724	0.049574	0.130916	0.169559	0.175843	0.229149	0.233698
2nd Highest =	**3.13**	**6.03**	**4.38**	**4.01**	**4.28**	**9.82**	**15.86**	**10.18**	**7.82**	**5.59**	**6.57**	**7.76**	**4.30**	**3.14**	**3.34**	**4.29**	**7.16**	**3.18**	**3.24**	**2.27**	**2.14**	**2.36**	**2.03**	**2.65**
3/1/2014 0:00	0.72608	0.458349	0.644294	0.47407	0.437524	0.558399	0.543912	0.640393	0.573552	0.703433	0.855873	0.763977	0.4927	0.299941	0.248324	0.196748	0.168856	0.119534	0.174224	0.287354	0.257271	0.332995	0.282433	0.578716
3/2/2014 0:00	0.605481	0.469234	0.382976	0.4193	0.508777	0.464985	0.369694	0.335567	0.353296	0.44641	0.438162	0.346841	0.227797	0.11508	0.121305	0.165777	0.263493	0.364736	0.321334	0.234173	0.180613	0	0.446068	0.550243
3/3/2014 0:00	1.279341	1.221737	0.568917	0.157544	0.062427	0.051363	0.020724	0.009285	0.146492	0.138436	0.169466	0.513816	0.816562	0.948801	0.860748	0.633404	0.273875	0.134012	0.16264	0.288254	0.321076	0.4035	0.406149	0.241482
3/4/2014 0:00	0.26643	0.427392	0.350646	0.193099	0.222337	0.165152	0.14698	0.229364	0.377827	1.127114	1.562521	1.536292	1.465349	1.374509	1.409069	1.353182	1.119582	0.980564	0.802844	0.735481	0.828856	0	0.774086	0.521802
3/5/2014 0:00	0.281732	0.212373	0.28677	0.314999	0.847934	0.241299	0.139448	0.132911	0.216364	0.290428	0.225039	0.151168	0.123959	0.128128	0.187748	0	0.037091	0.095876	0.026747	-0.00729	0.004067	-4.6E-05	0.011789	0.071068
3/6/2014 0:00	0.135664	1.015191	1.970832	1.9526	1.413533	0.843919	0.827321	0.93534	0.644708	0.254326	0.111606	0.069257	0.042411	0.145329	1.1397	0.652561	3.156564	5.151791	3.272146	0.425313	0.2748	0	0.21673	0.169842
3/7/2014 0:00	0.151474	0.184889	0.167927	0.167073	0.128778	0.151991	0.144651	0.177178	0.257579	0.601538	0.687795	0.861942	0.511602	0.315852	0.241042	0.267917	0.208327	0.172895	0.201526	0.251576	0.255469	0.220796	0.265095	0.221116
3/8/2014 0:00	0.221208	0.140775	0.075537	0.059666	-0.01818	0.017533	0.062372	0.201527	0.491466	1.012974	0	0.789655	0.554642	0.711938	0.709183	0.704607	0.759188	0.63395	0.442641	0.219917	0.209934	0.393607	0.470218	0.414609
3/9/2014 0:00	0.290257	0.273736	0.485198	0.230258	0.208958	0.231627	0.302473	0.23366	0.487514	0.762588	0.82351	0.827443	1.565986	1.934387	1.613778	1.472189	0.820356	0.686849	1.075637	1.206841	0.742454	0	0.955687	0.929664
3/10/2014 0:00	0.789335	0.752221	0.697347	0.634076	0.56931	0.439578	0.645694	0.633682	0.368692	0.295627	0.161712	1.915581	1.479451	0.910331	0.679212	0.651552	0.422303	0.187452	0.112026	0.104005	0.121884	0.818996	0.429496	2.491018
3/11/2014 0:00	0.668884	0.933822	0.4835	0.181094	0.098897	-0.00596	0.214781	0.680946	1.150308	0.855845	0.761421	1.146669	1.161138	1.097525	1.228579	1.300083	1.479512	0.260993	0.109936	0.087637	0.14226	0	0.114268	0.029895
3/12/2014 0:00	0.024945	0.027721	0.02271	0	0	0.159411	0.181415	0.161446	0.177562	0.123696	0.078372	0.041255	0.022589	0.024574	0.044775	0.062295	0.074333	0.112365	0.092659	0.059508	0.124093	0.129322	0.086996	0.097959
3/13/2014 0:00	0.108823	0.137152	0.202961	0.555179	0.60032	0.659236	0.821731	0.657273	0.660721	0.520178	0.302565	0.239848	0.231198	0.239066	0.294895	0.480016	0.537203	0.570327	0.566854	0.605543	0.59514	0	0.243743	0.275154
3/14/2014 0:00	0.258706	0.241507	0.194758	0.270083	0.203943	0.477019	0.719615	0.629179	2.279888	1.312687	0.810417	0.724052	0.390727	0.364066	0.375914	0.524754	0.485135	0.708779	0.787618	0.840955	0.829463	0.806007	0.805324	0.55219
3/15/2014 0:00	0.468929	0.616082	0.548338	0.238794	0.188524	0.358008	0.481471	0.463808	0.873245	0.646052	0.90719	0.786033	0.714079	0.570165	0.543431	0.396347	0.309049	0.328517	0.507183	0.34589	0.229451	0.118516	0.084677	0.027213
3/16/2014 0:00	0.090005	0.043532	0.026327	0.033639	0.034991	0.013682	0.028366	0.008906	0.018667	0.345136	0.830594	0.202639	0.109828	0.120596	0.109571	0.217089	0.446397	0.625384	0.580224	0.419676	0.258074	0	0.128205	0.136891
3/17/2014 0:00	0.078332	0.168831	0.126008	0.22407	0.223465	0.065457	0.092157	0.08303	0.092508	0.097864	0.129213	0.090104	0.133759	0.150827	0.141914	0.182301	0.13888	0.153901	0.139545	0.152881	0.135099	0.13987	0.109649	0.17995
3/18/2014 0:00	0.191072	0.162459	0.148503	0.126168	0.103456	0.13169	0.09242	0.115287	0.14435	0.11564	0.083905	0.061749	0.071095	0.098378	0.070326	0.070203	0.12864	0.467392	0.086508	0.036317	0.032937	0	0.014785	0.067891
3/19/2014 0:00	0.0926	0.163781	0.203276	0.314658	0.318958	0.063987	0.018304	0.039683	0.0473	0.026896	0.050152	0.1733	0.173994	0.311976	0.439488	1.369861	3.248162	4.233843	4.608283	2.616095	0.925414	1.194976	0.941369	0.498032
3/20/2014 0:00	0.384574	0.320054	0.327163	0.253275	0.139246	0.083815	0.106019	0.283842	0.452486	0.860704	0.888528	0.537365	0.422536	0.285517	0.324087	0.397943	0.418084	0.307664	0.353755	0.349891	0.302878	0	0.292439	0.178477
3/21/2014 0:00	0.140584	0.107922	0.02559	0.498461	0.47349	0.184788	0.460811	1.489344	1.019279	0.659686	0.556995	0.46702	0.560574	0.980029	0.648041	0.468086	0.437082	0.547191	0.611346	0.589199	0.530313	0.538646	0.575561	1.423224
3/22/2014 0:00	1.084597	1.34113	1.929626	1.044762	1.12114	1.229163	1.225175	0.774777	1.463023	1.358251	0.696442	0.547906	0.543031	0.786324	0.991414	0.856765	0.916268	0.893384	3.022219	8.18213	6.946516	4.777069	3.111994	1.997123
3/23/2014 0:00	1.986779	1.28086	1.064691	0.509343	0.308316	0.223659	0.298342	0.214951	0.137375	0.091686	0.054444	0.047141	0.083482	0.111285	0.016726	0.078252	0.034306	0.096001	0.094318	0.107178	0.34376	0	0.548167	0.239482
3/24/2014 0:00	0.305009	0.593721	0.861507	0.739933	0.974061	1.078586	1.341221	1.630582	1.361486	1.252743	2.225195	3.057707	2.427393	1.296557	0.568212	0.374119	0.238623	0.26906	0.333387	0.805917	0.765111	0.429633	0.344757	0.376435
3/25/2014 0:00	0.588727	0.773026	0.613237	0.917203	1.403978	1.562988	1.547	1.611874	1.692944	2.02747	1.941721	0.771966	0.607337	0.265596	0.066087	-0.00285	0.005406	-0.00922	0	-0.01897	-0.02153	0	-0.0079	0.006595
3/26/2014 0:00	0.012314	0.039931	0.061124	0.127771	0.207622	0.165326	0.045368	0.230333	0.680852	1.185892	0.99646	0.619432	0.494401	0.501721	0	0.721555	0.66381	0.521658	0.367806	0.60128	0.910487	0.974627	0.802024	0.84122
3/27/2014 0:00	0.956649	0.737487	0.649391	0.683346	0.790023	0.752187	0.504918	0.596908	0.811016	1.080185	0.947748	1.123894	0.538196	0.312155	0.302336	0.419716	0.601044	0.803507	0.687112	0.240111	0.090468	0	0.232262	0.22632
3/28/2014 0:00	0.118608	0.020519	0.017184	0.024948	0.041573	0.041219	0.019658	0.016682	0.058039	0.09518	0.13306	0.156416	0.098198	0.048804	0.022766	0.03496	0.03176	0.070902	0.071217	0.196304	0.161418	0.16594	0.237714	0.193351
3/29/2014 0:00	0.089938	0.0822	0.121012	0.077623	0.060324	0.116811	0.094938	0.334568	0.170272	0.093705	0.058118	0.031964	0.092167	0.10851	0.074642	0.083593	0.103491	0.083126	0.059643	0.071952	0.157519	0.163995	0.085732	0.17482
3/30/2014 0:00	0.12106	0.086188	0.018964	0.021439	0.020346	0.055441	0.101745	0.070061	0.076301	0.075379	0.0637	0.093222	0.094325	0.082766	0.161643	0.299135	0.382229	0.415432	0.432593	0.388943	0.321265	0	0.190926	0.176045
3/31/2014 0:00	0.21085	0.158505	0.17002	0.106736	0.350222	0	0	0	0	0	0	1.159425	0.818894	0.535557	0.498265	0.557266	0.445623	0.302989	0.279827	0.26776	0.191414	0.148116	0.427625	0.845608
4/1/2014 0:00	0.92887	1.028163	0.922426	0.783322	0.657055	0.991601	2.711802	2.696778	1.444415	1.252548	0.825089	0.338987	0.361312	3.196796	1.62548	0.706506	0.457876	0.434358	0.418962	0.495698	0.362386	0	0.34788	0.271653
4/2/2014 0:00	0.256368	0.207919	0.231235	0.191601	0.117109	0.209609	0.293567	0.134882	0.061277	0.031368	0.080112	0.077059	0.054103	0.254082	0.094972	0.069114	0.062326	0.047836	0.066876	0.159373	0.144369	0.187889	0.291891	0.561354

Centrevill, AL SEARCH Monitor - 2014 Hourly SO2 Data (ppb)

	##########	1:00:00 AM	2:00:00 AM	3:00:00 AM	4:00:00 AM	5:00:00 AM	6:00:00 AM	7:00:00 AM	8:00:00 AM	9:00:00 AM	##########	##########	##########	1:00:00 PM	2:00:00 PM	3:00:00 PM	4:00:00 PM	5:00:00 PM	6:00:00 PM	7:00:00 PM	8:00:00 PM	9:00:00 PM	##########	##########
4/3/2014 0:00	0	0	0	0	0	0	0	0	0	0.162588	0.187121	0.188019	0.149909	0.161515	0.187293	0.138847	0.144401	0.062038	0.14107	0.139737	0.073041	0	0.001021	0.060857
4/4/2014 0:00	0.234964	0.388631	0.35764	0.219593	0.124133	0.075017	0.070623	0.097226	0.019562	0.010264	0.115315	0.129955	0.102851	0.116183	0.070137	0.454693	0.229416	0.734848	3.409303	1.667423	1.68812	0.953868	0.29154	0.348574
4/5/2014 0:00	0.261032	0.140326	0.101606	0.123599	0.163415	0.125543	0.063622	0.17526	0.173313	0.270403	0	0.522527	0.044373	0.070171	0.023744	-0.00223	0.003973	-0.00746	0.032793	0.020552	0.033536	0.005358	0.038429	0.019854
4/6/2014 0:00	0.047423	0.013374	0.074411	0.065103	0.056153	0.049365	0.067266	0.094712	0.073467	0.027238	0.013212	0.037143	0	0	0	0.038184	0.04166	0.077913	0.072035	0.060406	0.027036	0	0.09082	0.077969
4/7/2014 0:00	0.088611	0.08015	0.061746	0.078987	0.039319	0.028359	0.003707	0.037031	0.038967	0	0	0	0	0	0	0	0	0	0	0	0	0	0	0
4/8/2014 0:00	0	0	0	0	0	0	0.18598	0.276332	0.412326	0.412561	0.431466	0.331008	0.236932	0.139979	0.133457	0.102962	0.074739	0.061257	0.036718	0.009228	0.022502	0	0.020179	0.027309
4/9/2014 0:00	0.028164	0.023157	0.040412	0.045	0.066273	0.023533	0.058513	0.198767	0.210058	0.213084	0.220918	0.21491	0.176063	0.217189	0.222616	0.152227	0.148427	0.052454	0.021271	0.028955	0.086398	0.160619	0.114474	0.138977
4/10/2014 0:00	0.119327	0.144742	0.130618	0.075048	0.066641	0.081405	0.07626	0.35597	0.437348	0.718409	0.85289	0.599842	0.560565	0.34486	0.377165	0.933981	1.153076	0.621363	0.506937	0.434345	0.384579	0	0.364016	0.343912
4/11/2014 0:00	0.452688	0.379941	0.273425	0.167114	0.095288	0.117682	0.145256	0.242579	0.272374	0.336697	0.264742	0.142754	0.130244	0.077433	0.090658	0.152557	0.181986	0.235979	0.296959	0.316806	0.211201	0.116512	0.145867	0.167099
4/12/2014 0:00	0.221217	0.221195	0.175141	0.105256	0.043935	0.02465	0.101204	0.359022	0.43093	0.16282	0.187421	0.306506	0.255451	0.250416	0.190397	0.129266	0.280698	0.465825	0.550441	0.395852	0.288952	0.216141	0.225544	0.299688
4/13/2014 0:00	0.337622	0.701565	0.681187	0.603207	0.42558	0.327271	0.371764	0.374147	0.21892	0.052201	0.055641	0.091047	0.077563	0.048669	0.037954	0.07116	0.071348	0.084575	0.059002	0.145283	0.149952	0	0.167958	0.225346
4/14/2014 0:00	0.457181	0.253372	0.197465	0.129547	0.092291	0.037845	0.006698	-0.00643	0.049144	0.056559	0.061006	0.085315	0.082611	0.07013	0.102071	0.128776	0.141885	0.191711	0.244118	0.180602	0.132985	0.142629	0.132386	0.130375
4/15/2014 0:00	0.140194	0.108948	0.087918	0.092852	0.095667	0.085299	0.061483	0.057986	0.075449	0.053328	0.067932	0.029479	0.026322	0.001747	0.011335	0.083603	0.154275	0.262424	0.307862	0.230435	0.170125	0	0.119348	0.062198
4/16/2014 0:00	0.111537	0.180613	0.208236	0.303675	0.393923	0.578888	0.793543	0.697496	2.073532	0.653905	0.155783	0.107043	0.081081	0.109102	0.141171	0.206577	0.187814	0.309773	0.429279	0.420002	0.299969	0.279418	0.157395	0.110688
4/17/2014 0:00	0.193589	0.162999	0.131986	0.10692	0.126949	0.118593	0.190223	0.190947	0.215253	0.254239	0.238072	0.217357	0.225304	0.192677	0.183086	0.173003	0.158694	0.165356	0.158297	0.129075	0.115784	0	0.253772	0.259198
4/18/2014 0:00	0.201495	0.15763	0.158225	0.116665	0.071084	0.083921	0.094017	0.1068	0.12414	0.312822	0.783489	1.177454	2.363573	2.66601	2.685573	4.005224	1.456634	0.287113	0.216278	0.238957	0.252286	0.440673	0.489754	0.448857
4/19/2014 0:00	0.365389	0.03657	0.015855	0.105597	0.562179	0.249672	0.300881	0.325839	0.27774	0.291436	0.33302	0.384944	0.375314	0.573031	0.597078	0.736337	0.79827	0.679487	0.731437	0.324669	0.207699	0.484996	0.545915	1.249459
4/20/2014 0:00	2.185389	0.701508	0.284308	0.090134	0.096495	0.076706	0.301469	1.407619	0.476893	0.280024	0.30526	0.407198	0.438004	3.276753	5.751006	1.822251	1.225322	1.077883	1.325887	3.037195	1.568669	0	1.192961	0.909375
4/21/2014 0:00	0.585179	0.687045	0.716892	0.308564	0.312043	0.2167	0.070612	0.450969	8.392043	5.644534	0.540917	0.67564	0.70002	0.473315	0.376379	0.272364	0.360618	0.406855	0.39052	0.276414	0.188472	0.410442	0.423808	0.449829
4/22/2014 0:00	0.285601	0.925728	1.24225	0.64588	0.425219	0.375453	0.309761	0.284177	0.148999	0.131953	0.131394	0.161138	0.135202	0.057605	0.034653	0.034134	0.000678	0.013683	0.007763	0.034633	0.081333	0	0.109761	0.065989
4/23/2014 0:00	0.065636	0.093145	0.128511	0.154344	0.111553	0.120447	0.197319	0.724149	1.273717	1.380553	1.182817	0.849109	0.643503	0.518963	0.495562	0.481198	0.46491	0.497404	0.523424	0.502159	0.544226	0.501254	0.343823	0.475846
4/24/2014 0:00	0.472342	0.33523	1.621932	6.396949	3.698872	0.918172	0.709752	0.593716	0.968823	0.716226	1.231583	1.836444	0.829341	0.50609	0.399977	0.480565	0.574846	0.51756	0.63992	0.552034	0.465665	0	0.688174	0.314003
4/25/2014 0:00	0.161711	0.236389	0.263198	0.209272	0.313484	0.322521	0.0712	0.114308	0.0889	0.142194	0.132759	0.126268	0.132518	0.127002	0.118513	0.127596	0.13028	0.119006	0.095489	0.125968	0.13571	0.137394	0.161694	0.143869
4/26/2014 0:00	0.070943	0.116167	0.164454	0	0	1.103653	1.250738	0.394835	0.259642	0.486364	0.283442	0.190371	0.277288	0.441112	0.35449	0.165153	0.256737	0.28753	0.19266	0.18237	0.207338	0.197897	0.224977	0.264098
4/27/2014 0:00	0.348586	0.259233	0.187371	0.169539	0.169705	0.067697	0.038316	0.020189	0.027799	0.045508	0.076552	0.055408	0.000822	-0.0073	-0.00726	0.141762	0.199909	0.110881	0.034418	0.016257	0.030329	0	0.149782	0.099423
4/28/2014 0:00	0.033493	-0.01223	-0.00046	0.041201	0.027134	0.010697	0.009442	0.044633	0.067962	0.129795	0.108514	0.08735	0.076745	0.122654	0.2809	0.335885	0.191153	0.150935	0.110107	0.103094	0.056822	0.112855	0.108676	0.036109
4/29/2014 0:00	0	0.010299	0.024068	0.050599	0.015131	0	-0.02021	-0.00396	0.021612	0.049453	0.120843	0.097456	0.022879	0.02517	0.046977	0.131926	0.130019	0.056175	0.057323	0.059328	0.042979	0	0.099223	0.150727
4/30/2014 0:00	0.085256	0.055044	0.062755	0.056691	0.087633	0.075271	0.068238	0.065459	0.093232	0.176107	0.182549	0.192519	1.047689	3.895734	0.915479	0.324899	1.319395	0.188725	0.180517	0.195796	0.079872	0.042422	0.097059	0.147061
5/1/2014 0:00	0.176892	0.183494	0.153809	0.078466	0.057227	0.08687	0.174014	0.150053	0.067155	0.188249	0	0	0.016354	0	0	0.12273	0.128078	0.064401	0.067438	0.021894	0.003576	0	0.017215	0.059037
5/2/2014 0:00	0.056998	0.065272	0.021979	0.024446	0.041829	0.025931	0.180122	0.056586	0.149163	0.128447	0	0	0	0.020793	0.105954	0.103615	0.082345	0.022676	0.051807	0.047757	0.031763	-0.00576	0.053544	0.031972
5/3/2014 0:00	0.015785	0.024874	0.025118	0.082595	0.039859	0.028246	0.038972	0.064947	0.053315	0.114234	0.127432	0.127879	0	0	0	0.187296	0.203831	0	0.177561	0.241274	0.242594	0.208437	0.174388	0.168987
5/4/2014 0:00	0.150012	0.132139	0.118565	0.041311	0.338748	0.241745	0.123435	0.23738	0.216974	0.338575	0.512525	0.473357	0.381257	0.308199	0.251319	0.223607	0.313079	1.974797	2.664047	3.339836	1.723731	0	0.394547	0.311584
5/5/2014 0:00	0.300082	0.292418	0.364042	1.036752	1.091974	1.272471	1.24882	0.953704	0.804891	0.715886	0.912199	0.733177	0.664344	3.217673	2.182626	0.713331	0.893867	0.707488	0.54208	0.345876	0.439192	0.599616	0.539593	1.63189
5/6/2014 0:00	3.025164	3.972297	1.706955	1.782281	1.317964	0.982427	1.207337	1.619281	1.193207	0	0.948659	1.214016	0.957025	0.518784	0.545182	0.346093	0.370811	0.366966	0.376032	0.747751	0.753608	0	0.496413	0.470581
5/7/2014 0:00	0.527368	0.70924	0.599622	0.507395	0.480406	0.44423	0.37931	0.514166	0.51092	0.308207	0.229023	0.207672	0.189256	0.180885	0.15988	0.172603	0.185913	0.140681	0.134271	0.085485	0.114406	0.120165	0.109809	0.157269
5/8/2014 0:00	0.20818	0.285821	0.271614	0.226493	0.187808	0.257932	0.211636	1.226342	2.765207	1.006215	0.733746	0.617358	0.09877	0.10534	0.051558	0.023377	0.080383	0.091855	0.074554	0.081402	0.092854	0	0.13946	0.167537
5/9/2014 0:00	0.176321	0.128614	0.100749	0.10557	0.132163	0.128959	0.135015	0.111173	0.160048	0.08553	0.06705	0.030216	0.055061	0.059192	0.123835	0.092682	0.159146	0.202753	0.149186	0.330805	0.582425	0.266179	0.166987	0.080941
5/10/2014 0:00	0.085757	0.141175	0.128982	0.043213	0.057425	0.057174	0.039458	0.032651	0.004906	0.000945	0.078088	0.100548	0.080678	0.074026	0.044475	0.04252	0.070526	0.101304	0.094524	0.058315	0.086753	0.098291	0.056477	0.089591
5/11/2014 0:00	0.071437	0.053713	0.058421	0.032914	0.088193	0.071248	0.027861	0.015801	0.021231	0.072317	0.135266	0.252542	0.185421	0.168679	0.099073	0.156126	0.202798	0.171864	0.09893	0.062055	0.094781	0	0.161746	0.193326
5/12/2014 0:00	0.165804	0.138713	0.17793	0.183132	0.183335	0.178685	0.104251	0.10322	0.084235	0.098296	0.105963	0.145987	0.129027	0.151649	0.146858	0.202992	0.217617	0.200842	0.17565	0.168495	0.14101	0.108533	0.065741	0.081615
5/13/2014 0:00	0.194474	0.348319	0.274791	0.194873	0.186631	0.137205	0.23155	0.403062	0.480646	0.482928	0.469923	0.292642	0.289152	0.221673	0.177655	0.100926	0.153426	0.148322	0.103338	0.065996	0.082304	0	0.098601	0.099753
5/14/2014 0:00	0.080735	0.078337	0.047835	0.024543	0.036224	0.039408	0.103806	0.228995	0.207484	0.115442	0.125378	0.078539	0.035659	0.038481	0.049632	0.052563	0.05699	0.090773	0.101617	0.077571	0.088315	0.089032	0.083501	0.078523
5/15/2014 0:00	0.131818	0.075007	-0.00675	0.022687	0.001728	0.007767	0.039845	0.017732	0.040718	0.117485	0.131773	0.128793	0.110829	0.044325	0.056219	0.100316	0.075825	0.055457	0.076056	0.025526	0.022455	0	0.093891	0.070322
5/16/2014 0:00	0.030456	0.035199	0.011452	0.043678	0.032801	0.019343	0.046531	0.131523	0.220928	0.146406	0.221563	0.158172	0.161089	0.154999	0.120643	0.089955	0.124187	0.106294	0.086747	0.084891	0.080808	0.062382	0.085908	0.169637
5/17/2014 0:00	0.836301	1.90147	1.013665	0.612551	0.684405	0.509925	0.696519	0.876034	1.378544	2.416513	1.737018	0.666145	0.598641	1.013793	2.615925	1.595849	0.565908	0.301464	0.433648	0.325043	0.195692	0.156006	0.077241	0.477129
5/18/2014 0:00	1.314189	2.420111	1.214123	0.856929	1.570363	1.774809	1.143762	1.128068	0.881066	0.305401	0.182573	0.08729	0.069553	0.172721	0.134455	0.190743	0.240765	0.325312	0.203011	0.158406	0.720588	0	0.782013	2.028962
5/19/2014 0:00	1.062543	0.295815	0.077568	0.062434	0.051477	0.050035	0.021707	0.064211	0.099395	0.180886	0.3993	0.901556	0.919619	0.741562	0.577519	0.664002	0.613354	0.713774	0.795325	0.879386	0.811187	0.55517	0.390488	0.260646
5/20/2014 0:00	0.341753	0.559452	0.289244	0.166809	0.127091	0.203084	0.308048	0.904248	16.36531	4.862367	0.569118	0.326615	0.284504	0.295138	0.502679	0.657282	0.662999	0.73947	0.934785	0.566528	0.292159	0	0.601731	0.594759
5/21/2014 0:00	0.749272	1.113352	0.903591	0.813985	0.764262	0.483804	1.839072	8.339462	3.014131	0.914928	0.542603	0.383992	4.778226	13.79379	11.44354	10.44445	9.832911	4.131941	1.921816	0.309829	0.423037	0.84812	0.913822	0.641376
5/22/2014 0:00	0.60504	1.536729	2.3948	1.732991	1.047563	0.612228	0.439371	0.357505	0.467525	0.727564	0.628633	0.515839	0.486642	0.201082	0.208774	0.15951	0.119726	0.045026	0.101151	0.101827	0.048532	0	0.113442	0.202614
5/23/2014 0:00	0.210996	0.231195	0.247335	0.236478	0.234345	0.463582	0.447702	0.329005	0.486215	0.332389	0.285427	0.255392	0.132739	0.085431	0.08529	0.093543	0.076193	0.060252	0.095179	0.228668	0.19415	0.199144	0.195037	0.155182
5/24/2014 0:00	0.147944	0.096586	0.111277	0.043142	0.022471	0.11462	0.091299	0.15041	0.587819	1.272766	0.869559	0.567347	0.420202	0.564556	0.464538	0.259838	0.298945	0.39399	0.44112	1.437709	4.171216	1.665575	1.851962	1.278381
5/25/2014 0:00	0.712651	0.67488	0.127472	0.098261	0.162851	0.181184	0.086163	0.226327	0.466963	0.502882	0.473871	0.625429	0.898597	0.748377	0.557615	0.515538	0.509234	0.577154	1.274362	3.482449	1.753194	0	0.236913	0.105659
5/26/2014 0:00	0.201806	0.172824	0.111403	0.057036	0.085586	0.156504	0.26144	0.91332	1.358791	2.406417	2.321474	1.472443	1.224808	1.262216	1.321712	1.169767	1.192155	0.957439	0.995723	1.04925	0.595206	0.225681	0.163272	0.107014
5/27/2014 0:00	0.071983	0.195156	0.111202	0.110939	0.146128	0.200428	0.157744	0.090441	0.098405	0.102697	0.059494	0.105983	0.155061	0.199136	0.160338	0.052451	0.03866	-0.01368	0.068117	0.178979	0.148879	0	0.060586	0.139707
5/28/2014 0:00	0.160876	0.162328	0.202444	0.144747	0.249905	0.203182	0.216211	0.280405	0.303248	0.20162	0.170804	0.119089	0.092721	0.024116	0	0.010445	-0.00621	0.012772	0.013911	0.038751	0.068704	0.009714	0.009943	-0.01109
5/29/2014 0:00	0.049501	0.092693	0.090523	0.166681	0.30957	0.280174	0.220984	0.227057	0.218747	0.140062	0.153004	0.109975	0.068323	0.014587	0.008562	0.053429	0.13737	0.059935	0.163135	0.266311	0.40603	0	0.306535	0.176759
5/30/2014 0:00	0.582929	0.397367	0.450606	0.372099	0.228929	0.353884	0.391286	0.311397	0.28563	0.170798	0.136207	0.127277	0.123524	0.219086	0.155466	0.018757	0.015259	0.048763	0.082003	0.079066	0.045025	0.048716	0.067865	0.05124
5/31/2014 0:00	0.062621	0.078966	0.087853	0.07165	0.085631	0	0	0	0	0	0	0.181889	0.156923	0.138348	0.153474	0.115066	0.092131	0.084432	0.076545	0.02969	0.015629	0.041045	0.102417	0.104984
2nd Highest =	**2.19**	**2.42**	**1.97**	**1.95**	**1.57**	**1.56**	**1.84**	**2.70**	**8.39**	**4.86**	**2.23**	**1.92**	**2.43**	**3.90**	**5.75**	**4.01**	**3.25**	**4.23**	**3.41**	**3.48**	**4.17**	**1.67**	**1.85**	**2.03**

6/1/2014 0:00	0.092603	0.120845	0.113502	0.162662	0.585728	0.527411	0.349243	0.231465	0.066558	0.011532	0.023634	0	0	0	0	0.114052	0.114231	0.117951	0.093582	0.087332	0.12375	0	0.123045	0.157477

Centrevill, AL SEARCH Monitor - 2014 Hourly SO2 Data (ppb)

	##########	1:00:00 AM	2:00:00 AM	3:00:00 AM	4:00:00 AM	5:00:00 AM	6:00:00 AM	7:00:00 AM	8:00:00 AM	9:00:00 AM	##########	##########	##########	1:00:00 PM	2:00:00 PM	3:00:00 PM	4:00:00 PM	5:00:00 PM	6:00:00 PM	7:00:00 PM	8:00:00 PM	9:00:00 PM	##########	##########
6/2/2014 0:00	0.096348	0.121263	0.106129	0.166139	0.127809	0.105245	0.117153	0.119285	0.153175	0.120437	0.041216	0.023127	0	0	0.035727	0.042551	0.047247	0.037025	0.040665	0.047335	0.036376	0.059963	0	0.050887
6/3/2014 0:00	0.045132	0.05036	0.061495	0.142966	0.109373	0.099971	0.174147	0.434204	0.329548	0.157894	0.128585	0.097425	0.133932	0.157255	0.166786	0	0.159561	0.121844	0.108425	0.110449	0.104202	0	0.011687	0.043406
6/4/2014 0:00	0.006804	0.050697	0.106586	0.133592	0.12479	0.087057	0.083957	0.081254	0.96428	2.062382	2.257803	2.480897	0	0	0.864785	0.328855	0.201708	0.154715	0.178401	0.172307	0.162553	0.113695	0.083441	0.159799
6/5/2014 0:00	0.26038	0.254727	0.176629	0.15798	0.139126	0.142529	0.498265	1.128822	0.896003	0.846151	1.105081	1.20326	0.446134	0.325176	2.413642	0.317221	0.318781	0.254028	0.235277	0.290151	0.523065	0	0.278257	0.109031
6/6/2014 0:00	0.108946	0.103727	0.1304	0.499926	0.650194	0.228693	0.654578	3.410562	0.772962	0.074823	0.195175	0.139761	0.276603	0.382646	0.260212	0.190038	0.163625	0.026624	0.036033	0.085344	0.046354	0.081537	0.039639	0.012504
6/7/2014 0:00	0.034955	0.024922	0.028878	0.044331	0.089385	0.054329	0.056208	0.111596	0.978684	1.756018	1.134692	0.646376	0.407628	0.283958	0.199454	0.141685	0.172481	0.181018	0.192981	0.419718	1.919466	0.386305	0.14177	0.057929
6/8/2014 0:00	0.059384	0.138077	0.175041	0.098518	0.063999	0.036172	0.074756	0.091413	0.09009	0.099986	0.181014	0.34068	0.549129	0.240524	0.083107	0	0	0	0	0	0	0	0	0
6/9/2014 0:00	0	0	0	0	0	0	0	0	0	0	0.151212	0.164272	0.092417	0.115389	0.094064	0.145339	0.155915	0.198239	0.170565	0.114133	0.145105	0.017357	0	0.024503
6/10/2014 0:00	0.073205	0.070124	0.051319	0.027796	0.006465	0.009255	0.054244	0.04754	0.16386	0.203001	0.282966	0.078479	0.019835	0.052992	0.62655	0.693971	0.141751	0.078328	0.080262	0.077994	0.077847	0	0.089798	0.099011
6/11/2014 0:00	0.060468	0.064633	0.071917	0.083555	0.062073	0.051566	0.00849	0.068005	0.036197	0.069882	0.080346	0.048944	0.040568	0.142069	0.12054	0.201114	0.768673	0.084605	0.022803	0.010073	0.018488	0.026427	0.037807	0.025424
6/12/2014 0:00	0.029743	0.001601	0.026875	0.033631	0.052639	0.088625	0.053352	0.092314	0.148944	0.170494	0.095149	0.041016	0.072767	0.082918	0.063003	0.050736	0.0928	0.065459	0.038389	0.034862	0.01441	0	0.05316	0.082196
6/13/2014 0:00	0.050358	0.035553	0.054608	0.137245	0.048063	0.061471	0.06281	0.031386	0.056911	0.061681	0.040631	0.008121	0.044605	0.092516	0.094467	0.06118	0.085763	0.123329	0.075201	0.097227	0.074899	0.1005	0.081038	0.094611
6/14/2014 0:00	0.042112	0.057612	0.083265	0.049453	0.185265	0.17892	0.247373	0.997111	1.508557	1.194647	0.857108	0.517995	0.20748	0.223894	0.239173	0.248127	0.187581	0.122274	0.303533	0.310545	0.369199	0.344933	0.309523	0.151047
6/15/2014 0:00	0.164231	0.191565	0.052621	0.06178	0.122664	0.468534	0.311384	1.070707	1.029055	0.998946	0.945811	0.881874	0.93146	1.506827	1.291508	0.597502	0.346872	0.319968	0.254728	0.257594	0.217627	0	0.150159	0.213595
6/16/2014 0:00	0.162618	0.198956	0.275119	0.085316	0.121308	0.234768	0.377788	1.050293	1.16719	0.923939	0.855959	0.781918	0.474177	0.407178	0.409453	1.754101	0.448356	0.182571	0.11296	0.049144	0.04413	0.030194	0.090646	0.102037
6/17/2014 0:00	0.120605	0.099875	0.075276	0.077762	0.14059	0.136168	0.219427	0.453672	0.851835	1.020493	0.797241	0.66124	0.47906	0.366845	0.362046	0.387237	0.554343	0.818282	0.547578	0.389251	0.344471	0	0.160329	0.122428
6/18/2014 0:00	0	0	0	0	0	0	0	0	0	0	0	0.464501	0.398625	0.194923	0.052926	-0.00567	0.022822	0.008912	0.033724	0.044763	0.059472	0.047123	0.05775	0.085069
6/19/2014 0:00	0.010503	0.04511	0.088301	0.072287	0.012017	0	0.309555	1.137066	0.923025	2.040485	1.319541	2.040299	1.641086	1.213804	0.566957	0.447301	0.620255	0.437827	0.462141	0.300398	0.257073	0	0.127333	0.179304
6/20/2014 0:00	0.249814	0.226005	0.115532	0.08704	0.134666	0.154929	0.123485	0.090304	0.126607	0.133519	0.117511	0.12908	0.113464	0.134214	0.150977	0.105498	0.079239	0.072011	0.039079	0.040769	0.125197	0.16432	0.062865	0.179402
6/21/2014 0:00	0.271275	0.231987	0.197016	0.168114	0.10687	0.024038	0.048313	0.268322	0.271617	0.16234	0.207861	0.273408	0.186783	0.13545	0.154506	0.101061	0.04837	0.714187	0.905733	1.804258	1.046815	0.414875	0.22581	0.19547
6/22/2014 0:00	0.108483	0.093078	0.081852	0.118484	0.087311	0.120562	0.042813	0.146651	0.268396	0.224639	0.211049	0.107903	0.039794	0.073582	0.021513	0.025683	4.67E-06	0.022594	-0.01357	-0.01952	-0.00273	0	0.014939	0.174111
6/23/2014 0:00	0.298887	0.15491	0.522023	1.333319	0.998779	0.97432	0.790054	0.970802	1.145749	0.56844	0.962126	1.197245	1.052007	0.509609	0.18975	0.094319	0.085364	0.119178	0.068954	0.114933	0.200322	0.160379	0.207149	0.241425
6/24/2014 0:00	0.174603	0.163644	0.166286	0.090014	0.093162	0.074914	0.113176	0.360101	1.222383	2.083033	0	2.779374	1.897096	0.767283	0.088225	0.508602	1.092757	0.888668	0.607018	0.114016	0.181622	0	0.077088	-0.00152
6/25/2014 0:00	0	0	0	0	0	0	0	0	0	0	0	0.099756	0.051165	0.056972	0.061272	0.092587	0.096133	0.639482	3.275429	2.728799	5.060604	1.601932	0.556647	0.151013
6/26/2014 0:00	0.156492	0.104664	0.104395	0.075917	0.123288	0.263677	0.244435	0.158896	0.756281	0.468894	1.977504	1.792728	1.932566	0.187936	0.243027	0.065323	0.05247	0.036045	0.061867	0.065618	0.044608	0	0.028057	0.014354
6/27/2014 0:00	0.353517	0.334409	0.181533	0.851084	0.415233	0.255432	0.155708	0.161443	0.148833	0.076776	2.287946	2.440263	0	0.029656	0.043449	0.019322	0.041332	0.075567	0.031885	0.059104	0.099493	0.149476	0.07927	0.04358
6/28/2014 0:00	0.003403	0.027303	0.02717	0.032366	0.030107	0.025932	0.034481	0.024206	0.063175	0.0367	0.038689	0.034619	0.067405	0.047827	0.039279	0.032444	0.053557	0.051666	0	-0.00488	-0.00071	0.027271	0.029373	0.085866
6/29/2014 0:00	0.066104	0.031932	0.041075	-0.00211	-0.01627	0.023139	0.048782	0.24222	0.289171	0.065075	0.212157	1.010419	1.864236	1.077532	1.024264	1.163968	0.251296	0.414363	0.569266	0.318936	0.264878	0	0.207198	0.106055
6/30/2014 0:00	0.051585	0.091631	0.068788	0.058864	0.067442	0.092133	0.142808	0.176696	0.500548	0.491994	0.444005	0.302497	0.262913	0.20452	0.199626	0.14488	0.098162	0.089607	0.141637	0.11637	0.21032	0.524339	0.334938	0.127998
7/1/2014 0:00	0.035488	0.040277	0	0.028477	0.020775	0.072729	0.051106	0.057458	0.17657	0.206384	0.094017	0.036216	0.083595	0.11185	0.094736	0.07601	0.071203	0.047899	0.114184	0.096979	0.52772	0	0.378262	0.128261
7/2/2014 0:00	0.310341	0.126894	0.084524	0.027416	0.019365	0.023056	0.099599	0.205521	0.165925	0.180616	0.20535	0.184783	0.10361	0.063867	0.088698	0.095054	0.119889	0.124274	0.187742	0.044106	0.061482	0.034408	-0.00412	0.014232
7/3/2014 0:00	0.021054	0.020488	0.04332	0.038099	0.120042	0.124741	0.187682	0.42524	0.484144	0.452762	0.50681	1.086099	0.430179	0.276858	0.261614	0.162821	0.284356	0.320681	0.323761	0.243942	0.202604	0	0.171271	0.180591
7/4/2014 0:00	0.218302	0.146835	0.095119	0.094181	0.113099	0.124859	0.169598	0.315156	0.306194	0.293394	0.209087	0.134533	0.225252	0.163245	0.174592	0.202213	0.25398	0.114828	0.190264	0.210042	0.224041	0.275058	0.288734	0.225868
7/5/2014 0:00	0.186353	0.196553	0.210099	0.327489	0.471049	1.41927	1.415779	0.976726	0.872619	0.753726	0.571386	0.299381	0.245304	0.189264	0.235863	0.199016	0.250714	0.316875	0.288749	0.219719	0.172577	0.113793	0.082411	0.057108
7/6/2014 0:00	0.025781	1.349419	2.653826	2.161608	1.651097	2.522959	2.196911	0.503561	0.184418	0.260238	0.242125	0.242389	0.251358	0.222548	0.254196	0.282098	0.235754	0.229097	0.143697	0.173017	0.105235	0	0.113228	0.156564
7/7/2014 0:00	0.185549	0.182297	0.148351	0.124587	0.068479	0.083438	0.076558	0.109783	0.233728	0.287891	0.208636	0.155956	0.217471	0.216475	0.197567	0.140481	0.113645	0.191104	0.187574	0.124427	0.131315	0.101989	0.090881	0.179472
7/8/2014 0:00	0.247855	0.215966	0.827147	1.530721	1.597991	1.083411	0.889632	0.710868	0.705284	0.603772	0.483889	0.539204	0.398354	2.96654	1.461635	1.113301	1.087705	0.256283	0.258516	0.287119	0.305579	0	0.978331	0.733806
7/9/2014 0:00	0.393678	0.597583	0.414855	0.495993	0.616226	0.256216	0.231531	0.224208	0.211673	0.133609	0.103137	0.580907	0.68601	0.86932	1.841405	0.178439	0.100719	0.031288	0.079547	0.130519	0.097783	0.094684	0.059418	0.083245
7/10/2014 0:00	0.184306	0.347697	0.287325	0.192607	0.186979	0.217786	0.195279	0.193263	0.124693	0.095184	0.084369	0.033459	0.053206	0.041636	0.069964	0.042154	0.070667	0.063203	0.046505	0.056061	0.047281	0	0.080553	0.066236
7/11/2014 0:00	0.089571	0.088165	0.155482	0.117469	0.125399	0.143707	0.121061	0.204727	0.268827	0.290978	0.387293	0.286001	0.257287	0.344139	0.282308	0.227168	0.29484	0.277367	0.269622	0.228869	0.252658	0.244069	0.230192	0.195652
7/12/2014 0:00	0.209256	0.157293	0.188928	1.255564	1.040882	0.49587	0.728169	0	0	0.544484	0.597575	0.332811	0.352681	0.475884	0.259298	0.336763	0.340082	0.246528	0.180694	0.132901	0.042401	0.119787	0.116539	0.118133
7/13/2014 0:00	0.183989	0.143447	0.104471	0.072878	0.045655	0.094331	0.098714	0.11331	0.135483	0.090367	0.116399	0.229359	0.229841	0.259552	0.300132	0.268625	0.23833	0.122307	0.088479	0.064415	0.066826	0	0.131278	0.207998
7/14/2014 0:00	0.199164	0.270234	0.354018	0.233207	0.262835	0.22335	0.566621	1.985453	1.358936	0	0	0	0	0	0	0	0	0	0	0	0	0	0	0
7/15/2014 0:00	0	0	0	0	0	0	0	0	0	0	0	0	0	0	0.447842	0.337184	0.142737	0.067123	0.057245	0.031076	0.117436	0	0.298746	0.269814
7/16/2014 0:00	0.199071	0.10178	0.078159	0.089112	0.127451	0.137855	0.18771	0.363678	0.528336	0.774983	0.63793	0.530336	0.507649	0.514581	0.547656	0.492707	0.333076	0.291773	0.232824	0.362958	0.548028	0.515549	0.466894	0.38215
7/17/2014 0:00	0.316533	0.198256	0.224288	0.200872	0.160253	0.166526	0.41727	0.946489	1.438583	2.7214	1.261002	0.945618	0	0.35908	0.219129	0.293747	0.365061	0.409039	0.341502	0.230672	0.227832	0	0.102048	0.117697
7/18/2014 0:00	0.16542	0	0	1.937109	0.856723	1.500046	0.852974	0.226171	0.023111	0.055222	0.159141	0.262953	0.335527	0.230393	0.115405	0.180759	0.128733	0.089383	0.039167	0.002486	-0.02001	0.049444	0.191294	0.207291
7/19/2014 0:00	0.074185	0.11341	0.214728	0.223962	0.249069	0.109066	0.046236	0.160175	1.033245	3.066983	2.463302	2.713545	2.054831	1.067699	0.314871	0.05896	0.040103	0.038798	0.066113	0.115078	0.080965	0.120635	0.124218	0.091763
7/20/2014 0:00	0.021969	0.013917	0.001643	0.024028	0.018837	0.123927	0.150899	0.21017	0.148869	0.159347	0.175625	0.107454	0.075641	0.081729	0.098313	0.060868	0.019897	0.029988	0.060646	0.049287	0.045461	0	0.017692	0.010118
7/21/2014 0:00	0.081232	0.113566	0.007005	0.042681	-0.0272	0.000105	0.010115	0	0	0.713724	0.26649	0.171024	0.165457	0.22466	0.238214	0.110308	0.121481	0.217789	0.235802	0.256179	0.360977	0.391366	0.123603	0.386015
7/22/2014 0:00	0.428818	0.173684	0.024955	0.063056	0.06159	0.149713	0.098286	0.17463	0.379974	-0.01201	0.031338	0.109211	0.110636	0.047716	0.054047	0.047251	0.06364	0.138557	0.093351	0.16523	0.104005	0	0.159754	0.142891
7/23/2014 0:00	0.092873	0.091183	0.011284	0.050826	0.566611	4.848448	4.00848	4.282817	3.856443	1.775375	0.560164	0.091155	0.084797	0.122175	0.126375	0.106341	0.150417	0.080709	0.120889	0.118386	0.110418	-0.01004	0.026352	0.021937
7/24/2014 0:00	0.042004	0.060551	0.093902	0.08247	0.087417	0.053334	0.018113	0.104295	0.143727	0.193201	0.207097	0.119772	0.106605	0.023869	0.040675	0.058044	0.09454	0.021385	0.079747	0.122293	0.137281	0	0.125796	0.16576
7/25/2014 0:00	0.190314	0.389243	0.552357	0.371803	0.256492	0.305957	0.158694	0.448397	0.821383	0.408241	0.270442	0.193447	0.120259	0.065754	0.016849	0.03659	0.049151	0.195573	0.27646	0.240132	0.163657	0.132519	0.157695	0.178928
7/26/2014 0:00	0.166405	0.153226	0.218526	0.129612	0.150831	0.044268	0.018715	0.106949	0.165071	0.120712	0.14273	0.193075	0.165655	0	0.026897	0.019874	0.048517	0.076543	0.033055	0.080488	0.215184	0.963866	0.878204	0.473553
7/27/2014 0:00	0.330984	0.285647	0.285997	0.15474	0.118733	0.131268	0.169142	0.278227	0.21189	0.125049	0.087131	0.038742	0.103034	0.093211	0.108684	0.127426	0.101458	0.096659	0.170812	0.172632	0.183816	0	0.19198	0.25337
7/28/2014 0:00	0.266453	0.202016	0.100878	0.058819	0.028966	0.072719	0.123273	0.207847	0.231317	0.242128	0.2606	0.291924	0.29093	0.246681	0.283925	0.322288	0.265492	0.293979	0.274446	0.236971	0.202837	0.205328	0.260651	0.155928
7/29/2014 0:00	0.180515	0.127212	0.121898	0.114308	0.140048	0.081685	0.255574	0.489579	0.899761	0.849494	0.520362	0.408187	0.333458	0.415725	0.364675	0.267412	0.269702	0.184286	0.168067	0.098782	0.12634	0	0.103992	0.069703
7/30/2014 0:00	0.123697	0.129868	0.126769	0.152766	0.170409	0.173972	0.148883	0.484901	0.949159	0.648424	0.482282	0.401374	0.291204	0.332479	0.353825	0.319992	0.235542	0.218781	0.22949	0.217407	0.194289	0.247267	0.274062	0.309866
7/31/2014 0:00	0.346481	0.306492	0.281585	0.490005	0.868906	1.242718	1.238222	1.447718	1.387186	1.971436	1.945788	1.133279	0.953644	1.038301	0.726442	0.441685	0.553062	0.494296	0.371655	0.323806	0.21135	0	0.242493	0.439081
8/1/2014 0:00	0.547756	0.385913	0.306821	0.491472	0.329984	0.768994	2.377841	10.18249	10.03223	4.945483	2.816058	0.749095	0.622214	0.600658	0.676658	0.333887	0.160705	1.777582	1.052663	0.275378	0.220439	0.359897	0.467413	0.268416
8/2/2014 0:00	0.093178	0.124475	0.123023	0.235478	0.187931	0.02868	0.0239	0.682319	0.466959	0.016965	0.025715	0.091025	0.200665	0.238392	0.087005	0.097505	0.190597	0.114331	0.077633	0.072952	0.053603	0.055815	0.15105	0.22995
8/3/2014 0:00	1.847272	4.403697	5.425936	9.510037	9.747459	15.2675	13.29867	6.611284	3.079823	0.930366	0.331367	0.76499	0.619372	1.234773	0.953052	0.773197	0.658537	0.253631	0.18598	0.314529	0.120163	0	0.06543	0.089156

Centrevill, AL SEARCH Monitor - 2014 Hourly SO2 Data (ppb)

	##########	1:00:00 AM	2:00:00 AM	3:00:00 AM	4:00:00 AM	5:00:00 AM	6:00:00 AM	7:00:00 AM	8:00:00 AM	9:00:00 AM	##########	##########	##########	1:00:00 PM	2:00:00 PM	3:00:00 PM	4:00:00 PM	5:00:00 PM	6:00:00 PM	7:00:00 PM	8:00:00 PM	9:00:00 PM	##########	##########
8/4/2014 0:00	0.071135	0.053545	0.04793	0.416146	1.880812	6.269154	12.6145	21.84411	13.02256	4.520775	1.441692	0.143808	0.262616	0.769476	1.132019	0.73445	1.70729	2.044378	1.530323	1.302353	1.032114	1.009986	0.545117	0.553145
8/5/2014 0:00	0.367491	0.321157	0.208624	0.405033	1.43637	2.501152	8.944307	9.503913	6.686338	7.339541	11.11973	6.075689	2.755783	0.809932	0.734517	1.594417	1.014963	1.195579	1.192578	0.98126	1.384423	0	1.133646	0.758154
8/6/2014 0:00	0.759117	0.436532	0.393138	0.406981	0.216453	0.323626	0.129381	0.43663	0.513038	0.30286	0.358614	0.265073	0.148495	0.095426	0.075925	0.072725	0.219103	0.212423	0.183467	0.198718	0.195635	0.230318	0.284132	0.338643
8/7/2014 0:00	0.331075	0.260999	0.247943	0.246305	0.24851	0.240739	0.177237	0.335802	0.889509	15.53649	11.93858	2.801453	1.787071	1.136447	0.656043	0.552409	0.487706	1.028534	0.68654	0.198026	0.164825	0	0.063862	0.176499
8/8/2014 0:00	2.272751	1.195944	0.358556	0.719214	0.730075	0.50734	0.656083	1.783838	1.099621	0.337881	0.199573	0.148518	0.094217	0.127188	0.087939	0.690013	0.201454	-0.00042	-0.02939	0.062235	0.021586	0.062269	0.133567	0.263132
8/9/2014 0:00	0.245615	0.260089	0.272727	0.273582	0.202603	0.326337	0.425271	0.548904	1.058236	1.645103	1.16447	0.994965	0.428828	0.045627	0.122984	0	0	0	0	0	0	0.14628	0.122702	0.164281
8/10/2014 0:00	0.184411	0.27903	0.194169	0.546212	0.345039	0.152795	0.203428	0.235955	0.213248	0.207569	0.233184	0.195692	0.237212	0.204823	0.166027	0.168388	0.185886	0.191863	0.197871	0.149959	0.07099	0	0.262908	0.866251
8/11/2014 0:00	0.696513	0.264661	0.05758	0.077093	0.093798	0.094205	0.135548	0.174289	0.178942	0.302307	0.406637	0.318376	0.262789	0.193528	0.103191	0.051063	0.037828	0.041022	0.027033	0.086275	0.063201	0.144253	0.110272	0.050726
8/12/2014 0:00	0.038206	0.041482	0.019514	0.086903	0.106323	0.140067	0.09403	0.093749	0.150745	0.141151	0.115873	0.159303	0.11254	0.135183	0.124958	0.084184	0.106102	0.598805	0.112465	0.0263	0.061103	0	0.108699	0.162506
8/13/2014 0:00	0.22012	0.209908	0.201234	0.304086	0.29515	0.273903	0.433318	0.703408	0.640144	0.44577	0.446599	0.477418	0.414089	0.316682	0.328406	0.460509	0.56225	0.561463	0.539171	0.658578	0.530145	0.47358	0.401856	0.294832
8/14/2014 0:00	0.249706	0.284259	0.204496	0.18334	0.344804	0.657575	0.79811	1.0181	1.390206	0.489175	0.974427	0.869476	0.715119	0.551701	0.439714	0.422694	0.433746	0.515743	0.594053	0.569617	0.392621	0	0.243925	0.256686
8/15/2014 0:00	0.308937	0.294754	0.280631	0.478712	0.943078	1.023776	1.184939	1.842409	2.524426	1.637569	1.793766	0.602178	0.313896	0.264538	0.164378	0.221801	0.216366	0.261316	0.249916	0.291176	0.290826	0.553049	0.554082	0.502146
8/16/2014 0:00	0.482994	0.473073	0.426864	0.283091	0.226855	0.202756	0.234506	0.353144	0.381803	0.610439	0.513905	1.253339	0.629579	0.383458	0.288072	0.179288	0.124169	0.164024	0.283117	0.518333	1.632762	2.203443	1.723866	1.009036
8/17/2014 0:00	0.440366	0.41535	0.41199	0.325851	0.306685	0.195118	0.318192	1.719284	1.230797	0.691922	0.503012	0.364202	0.28545	0.11208	0.128793	0.111158	0.099766	0.038704	0.00799	0.061089	0.088496	0	0.035493	0.012816
8/18/2014 0:00	0.049821	1.327716	1.825593	1.579945	1.620561	2.234658	2.743083	1.826784	0.821203	0.43151	0.268366	0.203457	0.16087	0.062566	0.041772	1.331678	1.95076	0.298281	0.124279	0.041393	0.096265	0.117091	0.047982	0.065637
8/19/2014 0:00	0.147168	0.109799	0.09278	0.190753	1.078999	1.689048	1.07145	0.329786	0.182572	0.169581	0.159898	0.126532	0.19611	0.197465	0.230307	0.099778	0.093166	1.836896	1.415355	0.783352	0.426704	0	0.033874	0.110544
8/20/2014 0:00	0.159504	1.881173	0.353537	0.229134	0.208823	0.318143	0.390468	0.423907	0.449967	0.326029	0.262419	0.171441	0.147748	0.076424	0.122376	0.136359	0.133424	0.178965	0.920883	2.351305	1.598283	1.133785	1.005787	0.586998
8/21/2014 0:00	0.41997	0.226563	0.133673	0.160859	0.156662	0.133742	0.251117	0.45848	0.411477	0.288402	0.230275	0.223967	0.199328	0.150899	0.149639	0.124612	0.184344	0	0.101038	0.060194	0.102373	0	0.049883	0.086609
8/22/2014 0:00	0.094675	0.175247	0.174783	0.169166	0.124851	0.137945	0.13592	0.088607	0.093146	0.147658	0.104817	0.029367	0.060607	0.062452	0.058137	0.07738	0.03211	-0.0037	0.044753	0.059375	0.144183	0.146984	0.152044	0.093852
8/23/2014 0:00	0.162542	0.106792	0.069173	0.108702	0.181827	0.131641	0.11368	0.109358	0.158446	0.140165	0.127334	0.123642	0.129662	0.111696	0.167193	0.195762	0.095654	0.088698	0.11663	0.093131	0.001925	0.084013	0.132677	0.157566
8/24/2014 0:00	0.079332	0.123407	0.127061	0.11235	0.153729	0.179387	0.234608	0.315815	0.587833	0.614736	0.611288	0.08439	0.046704	0.00397	0.108167	0.108234	0.112742	0.080019	0.245081	0.74413	0.286188	0	0.090422	0.138921
8/25/2014 0:00	0.172885	0.161085	0.102791	0.057406	0.070154	0.233603	0.379782	0.220439	0.182821	0.123627	0.164049	0.160393	0.1351	0.134778	0.198134	0.657432	0.966328	2.190106	2.269144	1.810631	1.327283	1.054068	0.435688	0.138886
8/26/2014 0:00	0.345977	0.775341	1.367284	2.308056	2.523341	2.025359	2.155016	1.921072	1.055217	0.336062	0	0	0	0.528936	2.453621	3.98922	1.688994	1.461616	1.680599	4.559797	3.621887	0	0.535089	0.46003
8/27/2014 0:00	1.867072	9.258535	11.54923	3.784204	2.439375	1.220593	0.837804	0.956466	2.097715	4.860968	3.361159	1.135538	0.901677	0.782781	0.696216	0.731089	0.847423	1.350233	1.318813	1.461503	1.907833	1.387924	1.050577	1.77248
8/28/2014 0:00	1.856287	3.525083	3.413081	1.586375	0.39267	6.076	13.13569	16.07238	14.76176	6.972709	3.086304	0	0.165932	0.586505	0.620744	0.674991	0.608802	0.52393	0.625411	0.585008	0.410149	0	0.32851	0.27148
8/29/2014 0:00	0.337732	0.351448	0.21943	0.311208	0.303756	0.267807	0.317276	0.523108	0.80449	2.57718	0.768288	0.513632	0.379714	0.819613	0.373364	0.272586	0.237259	0.199597	0.224039	0.246625	0.226232	0.24947	0.380748	0.463421
8/30/2014 0:00	0.532271	0.479894	0.425473	0.370695	0.34807	0.264024	0.475973	0.944523	0.858043	0.601045	0.395649	0.282913	0.217927	0.043707	0.013884	-0.00826	0.025556	0.029585	0.053348	0.080686	0.11745	0.186533	0.147	0.134532
8/31/2014 0:00	0.097879	0.11264	0.136936	0.153158	0.103662	0.081524	0.083238	0.43164	0.29056	0.244422	0.233567	0.171401	0.159665	0.148172	0.145468	0.102154	0.155908	0.071854	0.049742	0.074716	0.072174	0	0.053608	0.024515
2nd Highest =	**1.87**	**4.40**	**5.43**	**3.78**	**2.52**	**6.27**	**13.14**	**16.07**	**13.02**	**7.34**	**11.12**	**2.80**	**2.05**	**1.51**	**2.41**	**1.75**	**1.71**	**2.04**	**2.27**	**2.73**	**3.62**	**1.60**	**1.13**	**1.01**
9/1/2014 0:00	0.001995	0.029526	0.025991	0.058681	0.073845	0.088076	0.127081	5.786113	27.70378	5.081917	0.715141	0.95398	0.205225	0.150134	0.181495	0.203668	0.225154	0.246851	0.2213	0.203044	0.168428	0.054224	0.194557	0.164259
9/2/2014 0:00	0.162142	0.391085	0.423862	0.494878	0.359861	0.329974	0.361782	0.635235	0.621357	0.913502	5.754087	0.45866	0.179068	0.106769	0.308597	0.337365	0.23164	0.463693	0.906847	0.440314	0.228011	0	0.712634	0.359728
9/3/2014 0:00	0.334727	0.380469	0.21661	0.111567	0.045118	0.031726	0.136889	0.196837	0.221306	0.165672	0.122864	0.140202	0.149488	0.062008	0.070194	0.049254	0.068426	0.049104	0.058384	0.117206	0.156243	0.190652	0.219145	0.196658
9/4/2014 0:00	0.062725	0.100692	0.11061	0.06316	0.047478	-0.01511	0.08213	0.462893	0.662933	0.735824	0.627166	0.481544	0.522065	0.472229	0.336111	0.336646	0.28333	0.186108	0.221708	0.277685	0.199277	0	0.067466	0.086008
9/5/2014 0:00	0.046801	0.120789	0.164301	0.117418	0.053028	0.15828	0.232473	0.411468	0.450383	0.336593	0.206282	0.248242	0.166151	0.084104	0.068476	0.126456	0.148405	0.119998	0.143166	0.095214	0.0539	-0.00522	-0.00507	-0.00871
9/6/2014 0:00	-0.00589	0	0	0	0	0	0	0	0	0	0	0	0	0.206777	0.186888	0.003863	0.043641	0.095764	0.130623	0.169447	0.09343	0.089278	0.158061	0.167511
9/7/2014 0:00	0.131848	0.045759	0.035154	0.154608	0.114296	0.230125	0.409552	0.883517	0.942201	1.400315	1.462664	1.116849	0.736101	0.084863	-0.00632	0.028089	0.057234	0.04144	0.036638	0.027787	0.072433	0	0.049815	0.062282
9/8/2014 0:00	0.057949	0.044483	0.061488	0.063316	0.175692	0.234431	0.324608	0.415236	0.969846	0.714522	0.376145	0.232066	0.090122	0.027777	0.067261	0.200911	0.157219	0.098125	-0.0094	0.054406	0.015729	0.104331	0.237965	0.053241
9/9/2014 0:00	0.076189	0.064495	0.073726	0.04493	0.185508	0.259568	0.389862	0.413919	0.676316	0.44031	0.210827	0.01999	-0.00195	0.049025	0.04355	0.145278	0.15402	0.141663	0.114481	0.053116	0.021766	0	0.063436	0.22003
9/10/2014 0:00	0.318882	0.272802	0.209844	0.217682	0.205651	0.165553	0.247973	0.48774	0.564756	0.322058	0.249981	0.313101	0.328219	0.285163	0.199131	0.168615	0.232867	0.337177	0.432883	0.39683	0.277254	0.202251	0.169719	0.102176
9/11/2014 0:00	0.03295	0.072987	0.373812	0.564211	0.595292	0.416494	0.466006	0.601958	0.569631	0.536599	0	0.319051	0.369561	0.373853	0.403521	0.246502	0.156888	0.175954	0.130803	0.075074	0.02831	0	0.148141	0.226156
9/12/2014 0:00	0.098917	0.144926	0.276288	0.262166	0.197498	0.063763	0.127492	0.468464	0.518519	0.40908	0.223542	0.1215	0.105969	0.231801	0.252033	0.835688	0.211638	0.07981	0.107196	0.027822	0.056779	0.730329	0.421434	0.10703
9/13/2014 0:00	0.029685	-0.02707	-0.00705	-0.00525	0.108319	0.222455	0.176417	0.145508	0.162044	0.08609	0.032244	0.088303	0.11424	0.111603	0.080831	0.058043	0.006141	0.102097	0.202866	0.211764	0.19981	0.171951	0.118073	0.086332
9/14/2014 0:00	0.081609	0.121737	0.17873	0.259338	0.248251	0.172022	0.288355	0.351377	0.267527	0.208174	0.147528	0.116527	0.05229	0.07448	0.108897	0.08967	0.143002	0.106351	0.164808	0.31901	0.336363	0	0.157213	0.21005
9/15/2014 0:00	0.060677	0	0	0	0	0	0	0	0	0	0	0.483127	0.423126	0.278322	0.224568	0.238317	0.21959	0.370132	0.508091	0.987363	1.417634	1.569212	1.186406	1.29384
9/16/2014 0:00	1.837152	2.362667	2.744944	0	0	0	0	0	0	0	0	2.19306	1.208336	0.792766	0.786628	0.77983	0.599197	0.390745	0.173211	0.254127	0.336823	0	0.233053	0.130635
9/17/2014 0:00	0.106507	0.080869	0.044712	0.030983	0.176159	0.105577	0.073833	0.134682	0.198723	0.216002	0.257278	0.157765	0.035713	0.006858	0.082935	0.109065	0.119019	0.149576	0.138596	0.161696	0.215604	0.23766	0.231699	0.17477
9/18/2014 0:00	0.134771	0.164108	0.174259	0.42872	1.752055	7.685724	8.776017	10.07896	9.500667	5.108984	2.849765	1.179213	0.810002	0.564948	0.468629	0.168249	0.159832	0.15248	0.137062	0.211468	0.262722	0	0.156067	0.232283
9/19/2014 0:00	0.124749	0.034865	0.001462	0.093477	0.224652	0.194982	1.160093	2.0045	0.915677	0.224072	0.196829	0.225459	0.1939	0.27661	0.221024	0.217942	0.226674	0.161172	0.106048	0.103192	0.202158	0.137967	0.112008	0.092711
9/20/2014 0:00	0.173933	0.235486	0.254983	0.3755	0.272702	0.172423	0.140273	0.288789	0.169533	0.112113	0.045667	0.054953	0.043739	0.072106	0.050503	0.092909	0.057498	0.076965	0.084124	0.116906	0.115679	0.06561	0.059174	0.027423
9/21/2014 0:00	0.005482	0.04066	-0.00331	0.036673	0	0.55861	0.333853	0.221362	4.550995	6.202541	2.166596	2.459368	1.893317	0.067375	0.003496	0.055156	0.071576	0.142363	0.080312	0.122883	0.17642	0	4.039183	3.482764
9/22/2014 0:00	1.638481	0.296581	0.221771	0.04075	0.194731	0.197154	0.264714	0.451991	0.653021	0.7979	0.479741	0.252295	0.468345	0.64277	0.486121	0.452052	0.353571	0.234603	0.153175	0.111613	0.082893	0.090425	0.159332	0.290577
9/23/2014 0:00	0.512974	0.741838	0.778836	0.57213	0.518781	0.342187	0.35108	1.108774	2.451422	1.550367	0.531817	0.141095	0.63705	0.513677	0.469958	0.630076	0.558115	0.846764	0.657655	0.39987	0.368308	0	0.047602	0.158779
9/24/2014 0:00	0.195302	0.167472	0.202027	0.10762	0.26733	0.881676	0.684133	0.595077	0.249327	0.020448	0.06815	0.170292	0.108633	0.046482	0.228611	0.217921	0.27401	0.150884	0.562101	0.59147	0.374362	0.24757	0.376984	0
9/25/2014 0:00	0	0	0	0	0	0	0	0	0	0	0	0	0.431247	0.114103	0.106197	0.138307	0.347862	0.58002	0.634623	0.276364	0.154728	0	0.222992	0.113168
9/26/2014 0:00	0.279106	0.217744	0.221395	0.355392	0.835051	3.376501	10.5381	12.53719	8.039035	5.425056	2.656143	0.786558	0.362629	0.215368	0.484422	0.944851	0.787692	0.487173	0.400583	0.725986	1.279341	0.777962	0.341701	0.381118
9/27/2014 0:00	0.689258	0.534076	0.259409	0.247605	0.312329	0.432845	0.516228	0.280121	0.029413	-0.05153	0.024075	0.125016	0.130002	0.029537	0.033421	1.91E-05	0.064902	0.094269	0.096997	0.020752	0.070615	0.112566	0.099292	0.019423
9/28/2014 0:00	0	0	0	0	0	0	0	0	0	1.073443	1.033428	0.395572	0.146047	0.103299	0.161986	0.177247	0.13995	0.071745	0.081922	0.174109	0.200413	0	0.323375	2.493969
9/29/2014 0:00	0.903557	0.004021	0	2.512488	6.54747	11.93237	8.385084	3.788095	2.855102	2.857286	2.613779	1.217152	0.471841	0.077654	0.03089	0.01023	0.004203	0.198015	0.146137	1.806212	5.739051	13.80474	11.032	7.585594
9/30/2014 0:00	0	0	0	0	0	0	0	0	0	0	0	0	0	0	0	0	0	0	0	0	0	0	0	0
10/1/2014 0:00	0	0	0	0	0	0	0	0	0	0	0	0	0	0	0	0	0	0.334388	0.340758	0.297672	0.303107	0.33132	0.307567	0.204312
10/2/2014 0:00	0.153593	0.07578	0.045267	0.027996	0.043278	0.120802	0.104712	0.237226	0.188179	0.179017	0.085079	0	0	0.135202	0.073501	0.014861	0.008681	0.038686	0.132258	0.076322	0.076206	0	0.11949	0.132959

Centrevill, AL SEARCH Monitor - 2014 Hourly SO2 Data (ppb)

	##########	1:00:00 AM	2:00:00 AM	3:00:00 AM	4:00:00 AM	5:00:00 AM	6:00:00 AM	7:00:00 AM	8:00:00 AM	9:00:00 AM	##########	##########	##########	1:00:00 PM	2:00:00 PM	3:00:00 PM	4:00:00 PM	5:00:00 PM	6:00:00 PM	7:00:00 PM	8:00:00 PM	9:00:00 PM	##########	##########
10/3/2014 0:00	0.131581	0.104768	0.105268	0.072834	-0.01366	0.00752	-0.00206	0.047099	0.017955	0.16006	0.171132	0.064465	0.096522	0.107927	0.053896	0.085949	0.104394	0.152815	0.084843	0.108271	0.14918	0.155629	0.17232	0.160293
10/4/2014 0:00	0.148092	0.168517	0.123525	0.110914	0.102835	0.071042	0.04853	0.085289	0.084466	0.102251	0.10794	0.140838	0.14859	0.15855	0.128972	0.111999	0.055959	0.062547	0.067337	0.082521	0.060481	0.191031	0.173305	0.151788
10/5/2014 0:00	0.129475	0.090892	0.108707	0.06338	0.080932	0.099007	0.104167	0.066452	0.187405	3.303881	1.47527	0.63937	0.387734	0.37274	0.25604	0.254352	0.140318	0.300326	0.228236	0.187333	0.127779	0	0.404303	0.40668
10/6/2014 0:00	0.279328	0.236821	0.226069	0.128513	0.117853	0.096331	0.090021	0.170429	0.210399	0.248555	0.199521	0.178985	0.136851	0.154615	0.148287	0.298048	0.28286	0.278756	0.279255	0.185295	0.165661	0.170332	0.116807	0.080671
10/7/2014 0:00	0.066226	0.078407	0.052588	0.056773	0.028123	0.014054	0.003097	0.071283	0.116113	0.151918	0.151999	0.124023	0.068984	0.079891	0.100835	0.153167	0.183709	0.245625	0.154309	0.14211	0.091842	0	0.052768	0.011044
10/8/2014 0:00	0.049138	0.084637	0.120372	0.128495	0.1718	0.159149	0.159334	0.234437	0.29744	0.319177	0.312059	0.376339	0.36821	0.348857	0.301798	0.230827	0.259645	0.282789	0.292684	0.244248	0.147371	0.087396	0.103537	0.061414
10/9/2014 0:00	0.124789	0.385722	3.130493	4.637871	3.687439	2.73085	1.987746	3.102234	3.485579	3.168957	3.30606	2.175319	1.242445	0.5709	0.380614	0.315428	0.322364	0.275239	0.25193	0.127648	0.101951	0	0.052232	0.034723
10/10/2014 0:00	0.015753	0.080927	0.142869	0.258327	0.21942	0.168741	0.123663	0.059764	0.093886	0.107681	0.084948	0.08652	0.029561	0.039648	0.063031	0.075607	0.094126	0.075122	0.058781	0.08282	0.063273	0.077221	0.072859	0.114256
10/11/2014 0:00	0.155071	0.172124	0.116221	0.255712	0.254591	0.327982	0.329192	0.179331	0.200162	0.261958	0.199385	0.247564	0.311127	0.289735	0.441265	0.845935	0.391805	0.257682	0.276209	0.204465	0.181492	0.196934	0.134971	0.124807
10/12/2014 0:00	0.093785	0.089267	0.137813	0.143572	0.167358	0.203644	0.200557	0.204035	0.139849	0.123374	0.101607	0.177881	0.261553	0.469689	0.651364	0.750906	0.422218	0.1041	0.124751	0.079645	0.190883	0	0.393302	0.349727
10/13/2014 0:00	0.25872	0.285867	0.238419	0.186439	0.181893	0.206228	0.227214	0.246539	0.314194	0.322939	0.298401	0.212705	0.17804	0	0	0	0	0	0	0	0	0	0	0.044514
10/14/2014 0:00	0.031516	0.088661	0.063466	0.077019	0.053513	0.053774	0.085362	0.085831	0.120062	0.115702	0.134582	0.090868	0.076731	0.068215	0.069794	0.110353	0.095175	0.032051	0.026539	0.054909	0.083741	0	0.082908	0.088542
10/15/2014 0:00	0.076991	0.124982	0.0927	0.117387	0.085967	0.091413	0.103963	0.161907	0.167639	0.192455	0.166517	0.144858	0.183192	0.188055	0.180844	0.160309	0.227112	0.129947	0.114142	0.15138	0.14978	0.154277	0.132423	0.106394
10/16/2014 0:00	0.158013	0.190342	0.154932	0.068166	0.052612	0.079131	0.100899	0.101581	0.142101	0.209	0.138231	0.067965	0.184085	0.188851	0.164116	0.196033	0.185044	0.175403	0.172894	0.202447	0.113282	0	0.007542	0.011023
10/17/2014 0:00	0.035715	0.00676	0	1.476194	3.512727	2.767461	2.34983	1.048558	0.818612	0.755451	1.679035	3.004512	2.561358	1.487724	1.328616	3.453691	3.490334	1.911012	1.27376	0.780188	0.520187	0.774654	0.74782	0.47973
10/18/2014 0:00	0.53383	0.3812	0.265757	0.149066	0.123317	0.140605	0.145171	0.267248	0.282221	0.356727	0.377017	0.398723	0.368652	0.369789	0.352524	0.272876	0.212367	0.253234	0.321455	0.253981	0.309614	0.262653	0.253619	0.090877
10/19/2014 0:00	0.042749	0.032575	0.024492	0.111517	0.167864	0.17084	0.20681	0.292411	0.381921	0.265525	0.397005	0.478232	0.332763	0.252569	0.182705	0.19948	0.22397	0.20906	0.280655	0.302238	0.20213	0	0.224837	0.179134
10/20/2014 0:00	0.053224	-0.04764	0.296988	7.481778	20.69014	24.40865	22.63553	21.36327	18.74831	10.276	6.500324	2.772775	1.476665	1.019212	1.15125	0.765585	0.372523	0.326521	0.283562	0.217816	0.14076	0.305309	0.340988	0.208672
10/21/2014 0:00	0.251329	0.254308	0.231825	0.206605	0.189358	0.140606	0.087281	0.100636	0	0	0.594327	0.542253	0.269517	0.121359	0.343417	0.195178	0.307405	0.181327	0.119399	0.14071	0.112379	0	0.382041	0.67176
10/22/2014 0:00	0.554561	0.468954	0.309073	0.194286	0.168257	0.281069	0.3904	0.59549	0.499022	0.305072	0.256428	0.246529	0.340133	0.63628	0.437368	0.230092	0.172653	0.049706	0.032221	0.098118	0.125895	0.134218	0.128083	0.116941
10/23/2014 0:00	0.260687	0.535048	0.552933	0.473541	0.308136	0.343511	0.69607	0.954635	3.821455	9.642698	6.142192	3.425176	2.2936	1.240389	0.503637	0.173086	0.113823	0.280911	0.288073	0.158513	0.147827	0	0.23251	0.298284
10/24/2014 0:00	0.330782	0.289663	0.250408	0.134038	0.107513	0.130232	0.17865	0.211484	0.335446	0.442438	0.358693	0.143002	0.221259	0.259066	0.222659	0.145249	0.200889	0.24108	0.233673	0.947637	0.960154	0.765134	0.687433	0.608887
10/25/2014 0:00	0.518595	0.517323	0.473293	0.330978	0.292592	0.285451	0.305961	0.446451	0.628351	0.693481	0.687067	0.055698	0.068339	0.08684	0.077085	0.042287	0.108852	0.085142	0.080647	0.040037	0.056838	0.069747	0.079468	0.064531
10/26/2014 0:00	0.045911	0.125352	0.275758	0.338751	0.149517	0.109857	0.117146	0.178794	0.208999	0.178807	0.145	0.112214	0.166898	0.179029	0.11759	0.169504	0.167276	0.127854	0.087281	0.145054	0.162083	0	0.164602	0.160916
10/27/2014 0:00	0.211315	0.239057	0.131825	0.057691	-0.01192	0.061713	0.055923	0.078229	0.136016	0.282437	0.481037	0.322615	0.273418	0.341851	0.333673	0.254815	0.238846	0.713044	0.581952	0.290315	0.196762	0.189197	0.266837	0.180668
10/28/2014 0:00	0.165991	0.149877	0.128144	0.121589	0.055632	0.085835	0.07314	0.082821	0.054558	0.104316	0.102199	0.08477	0.16435	0.111543	0.108953	0.234141	0.202512	0.159519	0.143219	0.051569	0.044701	0	0.022991	0.029239
10/29/2014 0:00	0	0	0	0	0	0	0	0.057259	0.08025	0.050864	0.065657	0.111478	0.12246	0.118792	0.076961	0.095193	0.071317	0.026643	0.090205	0.053363	0.029486	0.05262	0.045382	0.090709
10/30/2014 0:00	0.078994	0.091884	0.097135	0.111712	0.142022	0.130057	0.17018	0.251439	0.456063	1.040973	0.966723	0.607275	0.465173	0.514283	0.459789	0.318181	0.28661	0.316969	0.337674	0.281763	0.32002	0	0.343528	0.341094
10/31/2014 0:00	0.299391	0.289712	0.197083	0.114665	0.089332	0.209631	0.336045	0.393032	1.453246	2.679578	2.194267	0.709467	0.603332	0.801492	0.801733	0.257694	0.125354	0.061235	0.119503	0.12597	0.126898	0.30715	0.19809	0.158145
11/1/2014 0:00	0.249678	0.214339	0.143308	0.121255	0.07467	0.076792	0.057207	0.162768	0.302682	0.549104	0.705732	0.782442	0.85706	0.612127	0.371937	0.358949	0.335119	0.227558	0.207822	0.239654	0.154922	0.128466	0.130509	0.097236
11/2/2014 0:00	0.048699	0.055971	0.069806	0.060808	0.057346	0.058035	0.008268	0.057613	0.263859	0.298842	0.456771	0.456588	0.567324	0.552849	0.609171	0.511243	0.406932	0.356558	0.225344	0.144427	0.210554	0	0.234886	0.155403
11/3/2014 0:00	0.561162	8.305734	16.51568	14.53037	14.78036	20.07549	19.93747	18.02779	13.04194	8.258676	5.150747	2.036461	1.138786	0.808983	0.619474	0.465162	0.610304	0.772769	0.968605	0.952546	0.727975	0.393117	0.512979	0.425429
11/4/2014 0:00	0.330897	0.436931	0.236031	0.24174	0.19788	0.682479	1.452194	1.157559	0.822987	0.702686	0.428532	0.44221	0.310558	0.205317	0.100833	0.179627	0.263865	0.285581	0.222757	0.271822	0.272678	0	0.24734	0.223745
11/5/2014 0:00	0.132942	0.191032	0.208285	0.136963	0.102	0.147606	0.118959	0.10368	0.110217	0.169883	0.117028	0.122544	0.095889	0.14026	0.164668	0.141519	0.086516	0.150625	0.098517	0.070073	0.110067	0.066407	0.034473	0.031618
11/6/2014 0:00	0.076878	0.143134	0.176564	0.221697	0.202499	0.225382	0.151094	0.045726	0.059057	0.007262	0.10599	0.242835	0.071076	0.112504	0.10741	0.179548	0.202948	0.178017	0.213195	0.489106	0.319682	0	0.193703	0.08412
11/7/2014 0:00	0.003757	0.050927	0.097426	0.113929	0.090061	0.040996	0.037449	0.048673	0.068113	0.11036	0.139896	0.158428	0.192635	0.088443	0.091366	0.205275	0.09254	0.130183	0.12555	0.179452	0.21128	0.208819	0.176719	0.135111
11/8/2014 0:00	0.142144	0.143146	0.088922	0.143948	0.134748	0.141219	0.260173	0.611975	1.578748	2.07091	1.269602	1.129849	1.555336	1.250096	0.623299	0.456434	0.507967	0.577519	0.474004	0.404676	0.446064	0.452498	0.485421	0.258274
11/9/2014 0:00	0.226699	0.075915	0.045528	0.015296	0.067354	0.083478	0.049769	0.133396	0.209057	0.391734	0.468862	0.427679	0.441986	0.468391	0.576978	0.398163	0.300176	0.232701	0.205305	0.230063	0.196649	0	0.13458	0.192971
11/10/2014 0:00	0.146538	0.09719	0.182084	0	0	0	0	0	0	0	0	0	0	0	0	0	0	0	0	0	0	0	0	2.07903
11/11/2014 0:00	2.28156	2.008449	2.044408	1.936363	1.692054	1.497912	1.195548	1.405024	1.602885	2.067912	1.52362	0.76863	0.738505	0.559972	0.451072	0.332692	0.328489	0.515713	0.273937	0.331864	0.460437	0	0.185425	0.219604
11/12/2014 0:00	0.265707	0.272988	0.213261	0.296992	0.452898	0.396407	0.299869	0.261306	0.27619	0.2691	0.368402	0.39874	0.365476	0.268574	0.298986	0.236816	0.278123	0.255298	0.244052	0.207709	0.193435	0.197042	0.170386	0.209337
11/13/2014 0:00	0.091882	0.085336	0.063453	0.063056	0.138541	0.082979	0.320169	0.779374	0.323175	0.447198	0.440445	0.2468	0.151025	0.176111	0.627199	0.969688	0.350485	1.190429	1.424354	0.427808	0.843755	0	1.779463	1.165769
11/14/2014 0:00	1.070586	0.799384	0.545801	0.216329	0.212975	0.285772	0.582726	0.693302	0.484006	0.390797	0.458282	0.498646	0.554685	0.365703	0.312125	0.314238	0.385851	0.473373	0.743288	1.295093	1.22151	1.042285	0.852506	0.471376
11/15/2014 0:00	0.350289	0.394969	0.405217	0.508845	0.461391	0.587237	0.431448	0.68719	3.47383	1.777439	1.719934	0.997583	0.636333	0.681471	0.683083	0.641371	0.593918	0.563815	0.430587	0.73002	0.528674	0.567586	0.509164	0.418041
11/16/2014 0:00	0.381187	0.413627	1.257501	0.996416	0.916242	1.156929	0.68116	0.823504	0.855488	0.702466	0.594016	0.563786	0.592599	0.449168	0.256438	0.184515	0.157893	0.11614	0.102627	0.267271	0.741952	0	0.763112	1.023244
11/17/2014 0:00	0.733828	0.600696	0.478726	0.238126	0.215339	0.210166	0.187943	0.169604	0.207172	0.229728	0.220233	0.402831	0.257763	0.079949	0.089826	0.127301	0.176911	0.228553	0.219702	0.280889	0.345321	0.368647	0.292119	0.21912
11/18/2014 0:00	0.19875	0.114102	0.084918	0.11856	0.08534	0.098866	0.117745	0.192311	0.262503	0.163234	0.125328	0.167558	0.135454	0.156553	0.167636	0.224015	0.255672	0.255057	0.171001	0.209111	0.243847	0	0.387121	0.241807
11/19/2014 0:00	0.139632	0.154931	0.108956	0.129605	0.082949	0.163736	0.352005	0.597656	1.88547	2.033926	0.975616	0.363814	0.295494	0.418757	0.531485	0.779676	1.037127	1.178883	1.010192	0.974398	0.735937	0.83376	1.792579	1.751613
11/20/2014 0:00	1.369063	0.891803	0.995975	0.797432	0.819753	0.976506	1.046586	0.99025	1.039747	0.8078	0.917223	0.668472	0.578941	0.4919	0.508317	0.558669	0.648481	0.62905	0.565345	0.497023	0.495857	0	0.388808	0.607384
11/21/2014 0:00	0.343277	0.361474	0.689305	3.547312	4.471611	7.130787	12.74764	21.46539	20.80236	16.51733	13.64275	6.714139	3.608027	1.336398	0.604813	0.241075	0.200849	0.345103	0.37574	0.355239	0.360284	0.943524	0.809702	0.742498
11/22/2014 0:00	0.814368	1.021868	1.496616	1.789094	3.334743	8.510014	6.831563	5.665712	4.226004	2.372538	1.371222	0.73919	0.678488	0.84659	0.7767	0.790918	0.67387	0.52335	0.357849	0.308242	0.195965	0.10654	0.154348	0.225142
11/23/2014 0:00	0.132453	0.141449	0.108763	0.22421	0.187148	0.133824	0.141485	0.170933	0.171945	0.173729	0.178889	0.161828	0.200609	0.141935	0.134258	0	0	0.121055	0.152584	0.154895	0.200769	0	0.267442	0.281265
11/24/2014 0:00	0.243374	0.189065	0.166586	0.187441	0.160209	0.174764	0.164688	0.201866	0.592869	0.237258	0.210965	0.163377	0.155403	0.164147	0.151206	0.070588	0.077242	0.132116	0.14536	0.095304	0.298898	0.277347	0.158168	0.186015
11/25/2014 0:00	0.289385	0.151199	0.120233	0.082356	0.1314	0.18839	0.165623	0.141107	0.181501	0.305374	0.648159	1.643136	1.669623	0.419035	0.551335	1.180743	1.222598	0.376392	0.369325	0.316271	0.254719	0	0.262601	0.294446
11/26/2014 0:00	0.203925	0.195654	0.330222	0.53679	0.509561	0.34428	0.366614	0.375925	1.207862	1.064444	0.565711	0.703834	0.360046	0.305701	2.039069	3.12929	0.694152	0.57998	0.570489	0.802079	1.709428	1.014156	0.314233	0.04341
11/27/2014 0:00	0.054431	0.117252	0.273539	0.405693	0.380368	0.52521	0.297509	0.172986	0.223977	0.177758	0.118049	0.181318	0.262368	0.425074	0.138397	0.105985	0.131223	0.175185	0.321734	0.400359	0.370088	0	0.395513	0.406353
11/28/2014 0:00	0.742199	0.815056	0.492148	0.370933	0.303937	0.220353	0.164663	0.36721	0.779019	0.600467	0.920749	3.493688	5.24147	5.964648	4.065016	1.973411	1.391166	0.655852	0.526296	1.329039	2.713723	2.80599	1.61068	1.355511
11/29/2014 0:00	1.122577	0.721877	0.50878	0.488979	0.504279	0.72486	0.926939	1.417297	1.256883	0.989533	0.881277	0.745174	0.568743	0.470335	0.408346	0.435545	0.504468	0.589601	0.510266	0.341889	0.273174	0.367508	0.326721	0.615732
11/30/2014 0:00	0.375693	0.292881	0.226595	0.117241	0.166452	0.094013	0.096888	0.08842	0.054052	0.060191	0.166451	0.131356	0.150785	0.158653	0.148904	0.180373	0.137038	0.164314	0.261897	0.272574	0.28956	0	0.251086	0.257496
2nd Highest =	**1.84**	**2.36**	**3.13**	**7.48**	**14.78**	**20.08**	**19.94**	**21.36**	**20.80**	**10.28**	**6.50**	**3.49**	**3.61**	**1.49**	**2.04**	**3.13**	**1.39**	**1.19**	**1.27**	**1.33**	**2.71**	**2.81**	**4.04**	**3.48**

Centrevill, AL SEARCH Monitor - 2015 Hourly SO2 Data (ppb)

	##########	1:00:00 AM	2:00:00 AM	3:00:00 AM	4:00:00 AM	5:00:00 AM	6:00:00 AM	7:00:00 AM	8:00:00 AM	9:00:00 AM	##########	##########	##########	1:00:00 PM	2:00:00 PM	3:00:00 PM	4:00:00 PM	5:00:00 PM	6:00:00 PM	7:00:00 PM	8:00:00 PM	9:00:00 PM	##########	##########
1/1/2015 0:00	0.271618	0.401771	0.441593	0.456175	0.476822	0.941454	1.5771	1.927921	2.04296	2.835756	0	3.796825	2.550332	1.604305	1.342561	1.117836	1.149359	1.132854	0.896971	0.681524	0.637046	0	1.214871	2.534971
1/2/2015 0:00	3.030515	2.457072	1.960668	0.948795	0.61714	0.745222	1.634227	2.320825	2.58146	2.036056	1.494082	0.88205	0.6157	0.304894	0.119293	0.06729	0.122954	0.142267	0.079983	0.078769	0.072399	0.065719	0.070713	0.087706
1/3/2015 0:00	0.160618	0.122652	0.082307	0.042723	0.06144	0.108125	0.020034	-0.0068	0.028991	0.013995	0.089115	0.104847	0.071875	0.043428	-0.01709	-0.0138	0.035483	0.013696	0.029086	-0.02992	-0.03741	-0.01678	0.008814	0.120395
1/4/2015 0:00	0.125213	0.316913	0.303885	0.374037	0.179507	0.108378	0.035202	0.04357	0.023834	0.056816	0.089494	0.133395	0.113897	0.139087	0.145644	0	0	0.495774	0.431297	0.260383	0.218075	0	0.21111	0.103463
1/5/2015 0:00	0.096551	0.077648	0.042493	0.050989	0.050975	0.005385	0.174132	0.228397	0.129916	0.216273	0.274843	0.268203	0.289288	0.343746	0.392105	0.352655	0.34203	0.36833	0.431951	0.364811	0.269735	0.138063	0.260694	0.294091
1/6/2015 0:00	0.179475	0.292965	1.044357	0.744503	0.419563	0.246461	0.336888	0.296845	0.406851	0.460642	0.390852	0.781868	0.995276	1.112434	0.780059	0.428269	0.409131	0.462178	0.4652	0.51484	0.497126	0	0.670287	0.605503
1/7/2015 0:00	0.680573	0.642175	0.532579	0.465259	0.435477	0.407036	0.439061	0.648206	0.95777	1.277586	1.028085	1.031303	1.035896	1.155694	1.655079	2.644419	1.657636	0.651019	0.939149	0.307343	0.429181	0.337344	0.556164	0.604951
1/8/2015 0:00	0.473517	0.430807	0.472974	0.508831	0.582284	0.683836	0.71346	0.777147	1.229173	4.101116	5.503891	5.138841	5.557121	5.689683	4.79948	3.592258	2.663746	2.173255	2.320738	2.026253	1.568266	0	0.941106	0.812534
1/9/2015 0:00	0.869782	0.827908	0.849094	0.728875	0.766793	0.716285	1.207699	0.81436	1.251037	0.948131	0.811248	0.568669	0.502612	0.450219	0.414499	0.402291	0.501027	0.496349	0.41951	0.321346	0.450062	0.435725	0.611979	0.652228
1/10/2015 0:00	1.008773	1.208977	1.40156	1.471799	1.151478	1.104132	1.452347	1.400427	1.470012	1.876016	2.908967	7.518293	8.566221	10.52688	11.2633	14.31952	15.76764	17.2989	17.95938	13.1766	12.19371	16.95575	17.24998	7.571674
1/11/2015 0:00	6.233848	4.561187	2.92221	1.539989	1.240171	0.810076	1.00333	1.238723	1.093248	0.691298	0.559861	0.418096	0.464033	0.443082	0.427445	0.451695	0.424206	0.329778	0.319901	0.456794	0.536957	0	0.46285	0.360618
1/12/2015 0:00	0.24236	0.223667	0.252487	0.306042	0.23867	0.1881	0.206286	0.148038	0.082373	0.094949	0.119818	0.103432	0.088335	0.150914	0.124399	0.193346	0.123104	0.162401	0.254708	0.196556	0.077524	0	0	0.234308
1/13/2015 0:00	0.221441	0.212523	0.250706	0.278643	0.300456	0.287032	0.32663	0.172587	0.172272	0.161207	0.146438	0.18906	0.269728	0.199052	0.159441	0.149454	0.105849	0.165654	0.115546	0.186039	0.127096	0	0.034456	0.062283
1/14/2015 0:00	0.161778	0.122486	0.104571	0.108543	0.053471	0.157124	0.133204	0.198912	0.203771	0.312284	0.373167	0.418701	0.393312	0.233513	0.111676	0.072531	0.029253	0.013148	0.042006	0.008386	0.006888	0.084742	0.196805	0.290231
1/15/2015 0:00	0.206127	0.100217	0.099768	0.127442	0.105104	0.194419	0.388426	0.321584	0.382078	0.396757	0.446292	0.546757	0.614225	0.587727	0.692285	0.508482	0.51425	0.476848	0.433955	0.472469	0.479458	0	0.538767	0.638967
1/16/2015 0:00	0.569369	0.54389	0.443025	0.411463	0.506148	0.386159	0.398706	0.48704	0.623731	1.298093	2.332475	2.350844	1.649526	1.194049	1.115738	0.903372	0.7753	0.807285	1.146726	1.268899	1.181685	1.095862	0.953942	1.055652
1/17/2015 0:00	0.522233	0.470761	0.626645	0.861729	0.372998	0	0	1.074999	0.827965	1.497469	1.157895	1.302449	0.629043	0.483737	0	0.01798	0.106864	0.069993	0.100909	0.069572	0.085807	0.039218	0.034069	0.045083
1/18/2015 0:00	0.113575	0.345919	0.353689	0.400751	0.497254	0.463723	0.399825	0.355133	0.415434	0.346389	0.179855	0.151657	0.225428	0.146435	0.125669	0.106219	0.060254	0.019844	0.068195	0.097601	0.081655	0	0.144515	0.114998
1/19/2015 0:00	0.311688	0.144189	0.096785	0.097407	0.291854	0.402356	0.382226	0.312788	0.756125	0.709993	0.406497	0.875518	2.091259	1.576393	2.49427	2.942494	2.876104	2.773556	2.117424	1.469665	0.962227	0.791712	1.402479	1.592203
1/20/2015 0:00	1.335688	1.347194	0.99809	0.859358	0.648837	0.551625	1.209897	1.641236	1.905045	2.198627	1.472011	0.923548	1.075264	0.879819	0.763311	0.907096	0.956257	1.451281	2.379144	1.017015	0.998409	0	1.406415	0.708702
1/21/2015 0:00	1.073531	0.887817	0.76752	0.7733	0.573609	0.916706	1.140689	1.43988	1.470277	1.282616	1.486727	1.228796	0.9798	0.728621	0.581147	0.585341	0.333691	0.256135	0.334694	0.426075	0.428905	0.436321	0.485154	1.214
1/22/2015 0:00	1.926405	0.829115	0.672251	0.572009	0.628647	1.70506	3.107908	6.184523	4.594427	4.08282	3.402653	4.279118	4.59329	2.024723	0.804791	1.079602	0.840899	1.43241	1.109248	0.639904	0.502051	0	0.242978	0.532349
1/23/2015 0:00	0.540851	0.093262	0.044713	0.042542	0.080679	0.116222	0.124618	0.488038	1.105354	1.146072	1.458879	1.095515	0.702449	0.246448	0.187923	0.214734	0.202272	0.164008	0.118668	0.103041	0.06982	0.107921	0.049393	0.10256
1/24/2015 0:00	0.142789	0	0.112985	0.065931	0.10005	0.089653	0.162814	0.336505	0.549661	0.863769	1.109058	0.862939	0.808719	0.535031	0.393254	0.339344	0.348456	0.313732	0.278725	0.320898	0.22188	0.261465	0.49263	0.292017
1/25/2015 0:00	0.282811	0.459627	0.502746	0.320555	0.234022	0.287258	0.159547	0.138257	0.472248	1.909728	2.467332	1.477471	1.233898	0.698881	0.82677	0.976398	0.725685	0.626227	0.630395	0.401265	0.39715	0	0.243421	0.224275
1/26/2015 0:00	0	0	0	0	0	0	0	0	0	0	0	0	0	0	0	0	0	0	0	0	0	0	0	0
1/27/2015 0:00	0.131534	0.116672	0.142879	0.109937	0.066609	0.072509	0.129697	0.3577	0.445079	0.561323	0.506808	0.773933	0	0	0.301117	0.331548	0.331146	0.348109	0.317733	0.274743	0.311426	0	0.974111	0.921572
1/28/2015 0:00	0.671796	0.544316	0.45899	0.352469	0.341578	0.346085	0.203564	0.088733	0.296743	1.216488	1.183876	1.13795	1.05694	0.813939	0.702558	0.696979	0.815727	0.885024	0.949074	0.839062	0.924843	0.733243	0.845498	1.796972
1/29/2015 0:00	1.502438	1.103724	1.017717	0.807352	1.051542	1.151751	0.811761	0.567763	0.57069	0.556596	0.482611	0.452775	0.496391	0.93872	0.75929	0.848184	0.901486	0.880785	1.107501	1.271774	0.682129	0	0.60841	0.203125
1/30/2015 0:00	0.159426	0.215548	0.186722	0.151789	0.263712	0.480995	0.312462	0.169959	0.180443	0.15388	0.119275	0.119207	0.132804	0.112042	0	0.726427	0.173446	0.167894	0.161667	0.223071	0.237543	0.31783	0.307557	0.343899
1/31/2015 0:00	0.58427	0.825533	1.422953	1.840588	1.312877	0.84251	1.346277	1.058464	8.41302	3.327777	1.797573	0.438529	0.308289	0.604403	0.39378	0.265558	0.190149	0.181792	0.481508	0.854305	0.953111	0.735863	0.945072	0.699838
2/1/2015 0:00	0.79941	1.739179	2.652503	1.970296	1.400337	1.306458	1.309065	1.025203	0.740636	0.222176	0.112049	0.12989	0.144908	0.108004	0.096855	0.042365	0.021827	-0.00834	0.020045	0.088157	0.15758	0	0.073276	0.022226
2/2/2015 0:00	-0.00634	0.009681	0.037098	0.123889	0.131079	0.111979	0.061629	0.029622	-0.0221	0.01414	0.042919	0.064463	0.131762	0.288851	0.315456	0.278277	0.196132	0.13309	0.254458	0.372646	0.384268	0.39647	0.496745	0.535883
2/3/2015 0:00	0.554716	0.420924	0.320812	0.281003	0.158039	0.137834	0.416926	0.579522	1.04173	1.324311	0.832262	0.570209	0.620015	0.887549	0.807733	0.617626	0.75862	0.631591	0.693845	1.030797	1.165081	0	1.057425	0.938572
2/4/2015 0:00	0.251954	0.821758	1.04484	0.562582	0.793296	0.665679	0.470643	2.701843	2.115959	0.242114	0.682493	0.734189	0.350413	0	0.103781	0.488417	0.633397	0.732564	0.660887	0.479625	0.511512	0.507769	0.224479	0.674562
2/5/2015 0:00	0.339962	0.46627	0.457822	0.473468	0.755079	0.873299	0.753971	0.686265	0.765007	0.429766	0.389406	0.570618	0.503617	0.795832	0.60842	0.540572	0.477775	0.558711	0.479713	0.480472	0.518073	0	0.58876	0.451068
2/6/2015 0:00	0	0	0	0	0	0	0	0	0	0	0	1.127565	0.754805	0.432175	0.335514	0.405167	0.413237	0.523682	0.519149	0.407885	0.439316	0.485001	0.476094	0.333502
2/7/2015 0:00	0.413147	0.408249	0.499072	0.888255	0.850657	0.505597	0.495604	0.902344	1.729682	2.108853	2.606048	1.373485	0	2.377919	1.745717	2.12322	1.899607	1.368789	0.883858	0.551061	0.418941	0.358626	0.415381	0.48837
2/8/2015 0:00	0.412236	0.542742	0.331139	0.318327	0.653227	0.563961	0.556307	0.771781	0.992984	0.890047	0.607494	0.365949	0.266581	0.165026	0.098077	0	0	0.191619	0.065998	0.103586	0.17352	0	0.545417	0.575105
2/9/2015 0:00	0.561346	0.508514	0.549118	0.849971	1.429378	1.495423	0.995619	0.559545	0.386332	0.311585	0.289252	0.401609	0.312261	0.287069	0.315812	0.332117	0.265847	0.322823	0.217028	0.087682	0.171784	0.14461	0	0.272903
2/10/2015 0:00	0.179877	0.212996	0.069579	0.082322	0.039857	0.111454	0.131675	0.158707	0.189435	0.390131	0.530185	0.776471	0.862575	0.939378	0.870924	0.757116	0.781085	0.749839	0.639153	0.461503	0.510187	0	0.452868	0.235643
2/11/2015 0:00	0.201865	0.206312	0.361928	0.312065	0.239295	0.183354	0.524356	0.368222	0.595816	2.794003	2.042441	0.786959	0.492855	0.191782	0.217331	0.285346	0.379258	0.281407	0.328542	0.374167	0.387508	0.541083	0.712247	0.957661
2/12/2015 0:00	0.935594	0.934076	0.861442	0.867727	1.137091	1.060596	1.066105	1.102947	0.471912	0.399062	0.295477	0.300975	0.285372	0.326436	0.507175	0.447467	0.412451	1.157256	0.375797	0.360556	0.406826	0	0.116251	0.019104
2/13/2015 0:00	0.026324	0.045299	0.064764	0.324417	0.465452	0.585114	0.638593	0.684841	0.832987	0.880376	0.847399	0.772705	0.678588	0.57369	0	0.691113	0.804301	0.79403	0.71079	0.718033	0.609334	0.698177	0.572662	0.56543
2/14/2015 0:00	0.452957	0.530405	0.715527	1.0453	0.935126	0.793347	0.858941	0.782663	0.699119	0.562074	0.765442	1.326917	1.134029	0.89976	0.765261	0.67866	0.508089	0.456204	0.394332	0.376877	0.647525	0.752424	0.585176	0.520715
2/15/2015 0:00	0.853641	0.957704	0.738651	0.22439	0.161652	0.254521	0.260545	0.490775	0.751742	1.032847	0.592254	0.71651	0.954246	1.160444	1.220375	0.811405	1.036707	3.994568	4.188482	4.552037	13.27626	0	5.438748	14.33683
2/16/2015 0:00	4.462442	0.979986	0.364982	0.554158	0.800423	1.269645	1.881923	1.759424	0.751167	0.304573	0.182512	0.12202	0.21443	0.305869	0.274756	0.282733	0.244266	0.177048	0.07425	0.03265	0.126398	0.113564	0.130338	0.069765
2/17/2015 0:00	0.069135	0.100674	0.131542	0.344318	0.698869	1.040502	0.966075	0.871859	0.800578	0.785126	0.88504	1.150529	1.268943	1.120097	1.123193	1.009818	1.043896	0.963996	1.253114	2.911355	2.918096	0	1.74891	1.092749
2/18/2015 0:00	0.77	0.859082	0.825178	0.472768	0.25605	0.219563	0.200559	0.224385	0.18431	0.153796	0.134522	0	0.072188	0.058996	0.053475	0.094787	0.077686	0.09157	0.121754	0.049168	0.031057	0.001359	0.02289	0.03474
2/19/2015 0:00	0.020287	0.021677	0.017112	0.012601	-0.03223	0.004239	0.008081	-0.00022	0.052097	0.03973	0.074088	0.039017	0.052981	-0.00804	-0.01839	0.008722	-0.03519	0.024451	-0.02126	-0.00541	-0.02268	0	0.062035	0.048816
2/20/2015 0:00	0.068254	-0.00584	0.020627	-0.00134	0.083077	0.182488	0.243989	2.21558	5.251323	1.306417	0.329461	0.481878	0.404968	0.269548	0.253898	0.351248	0.481074	0.393688	0.327432	0.531985	1.046302	1.298158	1.018848	0.847312
2/21/2015 0:00	0.794649	0.559776	0.4389	0.310376	0.295723	0.237635	0.229942	0.135776	0.147931	0.109613	0.103963	0.061745	0.089552	0.09476	0.107777	0.123456	0.084957	0.097407	0.106881	0.104014	0.165655	0.170357	0.130135	0.088863
2/22/2015 0:00	0.107847	0.096118	0.112984	0.102492	0.052124	0.110178	0.103213	0.064492	0.066061	0.062103	0.0722	0.066233	0.108942	0.142297	0.084647	0.096092	0.119068	0.086767	0.072236	0.067004	0.046138	0	0.06728	0.127033
2/23/2015 0:00	0.110634	0.083836	0.014305	0.020307	0.006564	0.001993	0.020498	0.118967	0.096718	0.067583	0.093524	0.250045	0.380253	0.823008	0.613487	0.560665	0.705569	0.388995	0.183026	0.087496	0.135924	0.520252	1.187596	0.552583
2/24/2015 0:00	0	0	0	0	0	0	0	0	2.032427	2.080914	0.648129	0.371808	0.317782	0	0	0.263624	0.304449	0.416299	0.468351	0.481879	0.429788	0	0.245972	0.174425
2/25/2015 0:00	0.173334	0.285835	0.228411	0.237917	0.226417	0.336824	0.60689	0.604162	0.686155	0.359639	1.689735	0.758656	0.179739	0.171477	0.003342	0.550073	1.333401	0.545239	0.316978	0.161591	0.102046	0.135424	0.142793	0.01421
2/26/2015 0:00	0.008178	0.038351	0.130146	0.007051	0.012326	0.034998	0.067439	0.078187	0.060844	0.093338	0.106923	0.11439	0.150653	0.368295	0.521571	0.322168	0.336481	0.350792	0.35032	0.344157	0.271151	0	0.101735	0.085554
2/27/2015 0:00	0.143847	0.460548	0.693273	0.888372	0.845375	0.654919	0.520727	0.432604	0.49262	0.81991	0.936749	0.906506	0.731473	0.696391	0.802649	0.92801	0.936605	0.93006	0.75721	0.581024	0.562246	0.511691	0.447042	0.402564
2/28/2015 0:00	0.410377	0.512893	0.640706	0.759457	0.680626	0.848629	1.575841	5.484817	4.11696	0.897117	0.565974	0.452812	0.515813	0.336816	0.238396	0.265094	0.177359	0.184428	0.315415	0.705495	0.699697	0.502046	0.442487	0.366045
12/1/2015 0:00	0.040568	0.01597	0.025214	0.032471	0.048989	0.047165	0.028377	0.018183	0.027167	0.006315	0.021172	0.010526	0.012265	0.014568	0.00035	0.062858	0.078244	0.067463	0.084071	0.036502	0.013422	0	0.029949	0.062327
12/2/2015 0:00	0.092262	0.083211	0	0	0.041106	0.093598	0.051295	0.115027	0.105932	0.142648	0.102632	0.09594	0.085997	0.056094	0.069622	0.042051	0.01891	0.034889	0.014814	0.027745	0.032405	0.032953	0.052482	0.110582
12/3/2015 0:00	0.108222	0.116926	0.096868	0.081739	0.09952	0.106074	0.114591	0.102025	0.113142	0.088171	0.085588	0.062182	0.07492	0.107507	0.069621	0.056054	0.058561	0.076766	0.059985	0.055552	0.105966	0	0.130083	0.146015
12/4/2015 0:00	0.149944	0.147311	0.123689	0.088814	0.082514	0.072087	0.050545	0.089317	0.097752	0.080757	0.442368	0.425555	1.506109	0.657075	0.441893	0.506345	0.503884	0.426077	0.32697	0.441516	0.320719	0.252154	0.161171	0.06404

Centrevill, AL SEARCH Monitor - 2015 Hourly SO2 Data (ppb)

12/5/2015 0:00	0.04302	0.159653	0.225994	0.420274	1.242491	0	0	0.226802	0.262759	0.1714	0.139058	0.237094	0.175509	0.239629	0.22115	0.132917	0.110379	0.361216	0.72667	0.8994	0.894861	0.637049	0.426966	0.144551
12/6/2015 0:00	0.11908	0.086548	0.057346	0.071402	0.213761	0.312009	0.264367	0.095835	0.139087	0.226468	0.271148	0.310019	0.203418	0.167558	0.186952	0.176806	0.185987	0.157517	0.163092	0.161136	0.135102	0	0.094459	0.093342
12/7/2015 0:00	0.09724	0.088451	0.095164	0.089969	0.073385	0.13771	0.094838	0.118218	0.151159	0.228068	0.347437	0	0.242144	0.42686	0.643087	0.645615	0.586848	0.452384	0.374212	0.211839	0.270639	0.367781	0.401596	0.281957
12/8/2015 0:00	0.273615	0.13644	0.118093	0.033471	0.017135	0	0	0.147025	0	0.374812	0.507421	2.800246	2.092465	0.99423	0.470365	0.290274	0.335098	0.420715	0.375122	0.360407	0.419188	0	0.098167	0.238395
12/9/2015 0:00	0.212531	0.195888	0.208028	0.215573	0.146661	0.194612	0.185043	0.276563	0.389151	0.549375	0.721341	0.55591	0.467575	0.450367	1.840596	0.789319	0.381056	0.2247	0.35442	0.328473	0.234029	0.248882	0.238557	0.184088
12/10/2015 0:00	0.119137	0.040129	0.048711	0.050609	0.084394	0.088185	0.163881	0.177269	0.164224	0.142023	0.114193	0.319634	0.454264	0.520098	0.463041	0.730671	0.408475	0.333012	0.328056	0.263047	0.072891	0	0.100363	0.092666
12/11/2015 0:00	0.053536	0.052704	0.066633	0.056727	0.068616	0.054203	0.062255	0.054102	0.047226	0.059919	0.088432	0.159252	0.197443	0.242231	0.282946	0.270213	0.194074	0.174046	0.159155	0.128407	0.13659	0.120857	0.137067	0.121815
12/12/2015 0:00	0.097834	0.114185	0.1598	0.12028	0.052297	0.034007	0.023183	0.037588	0.149502	0.168842	0.211601	0.376827	0.369638	0.289941	0.298721	0.376358	0.431687	0.28956	0.276148	0.340479	0.34279	0.23543	0.327427	0.63808
12/13/2015 0:00	0.669423	0.556444	0.590348	0.374914	0.430349	0.490752	0.427633	0.527068	0.466309	0.331612	0.297637	0.355088	0.414622	0.169349	0	0	0.077309	0.060869	0.086264	0.100706	0.129634	0	0.133767	0.169793
12/14/2015 0:00	0.230904	0.206828	0.128893	0.094962	0.078137	0.069288	0.06763	0.039028	0.074619	0.072573	0.046266	0.095372	0.074633	0.47838	1.983953	0.408852	0.189268	0.113778	0.264906	0.817439	0.748687	0.560118	0.299726	0.202101
12/15/2015 0:00	0.332988	0.314505	0.285305	0.08661	0.079759	0.030464	0	0	0	0	0	0	0	0.245308	0.230012	0.212227	0.22171	0.257423	0.271036	0.290304	0.181546	0	0.284052	0.190806
12/16/2015 0:00	0.175953	0.21707	0.149121	0	0	0.845694	0.728454	0.077382	0.624605	0.536862	0.119258	0	0	0.093733	0.011398	0.041029	0.030197	0.049948	0.047468	0.05931	0.028985	0.026868	0.030646	0.010155
12/17/2015 0:00	0.012063	-0.0166	0.016834	0.047407	0.032133	0.049569	0.039064	0.005196	0.02585	-0.00425	0.038303	0.0315	0.060846	0.094539	0.112742	0.109758	0.106318	0.096125	0.083002	0.057078	0.045546	0	0.033368	0.060431
12/18/2015 0:00	0.04086	0.01628	0.054539	0.068298	0.055852	0.093283	0.082963	0.116129	0.127673	0.138865	0.074305	0.10118	0.101106	0.072821	0.076367	0.058982	0.041923	0.055895	0.051892	0.083066	0.070131	0.092604	0.08959	0.05344
12/19/2015 0:00	0.009969	0.001871	0.011147	-0.00255	0.014978	-0.01017	0.025873	0.071584	0.105558	0.108644	0.078182	0.093689	0.101644	0.119103	0.104928	0.098081	0.072785	0.042443	0.122765	0.22721	0.121737	0.099502	0.067083	0.014122
12/20/2015 0:00	0.013442	0	0	0.761085	0.459252	0.374772	0.319554	0	0	-0.02453	0	-0.04141	0	0	-0.03799	0.060727	0.089788	0.100501	0.18189	0.211989	0.225174	0	0.224135	0.18796
12/21/2015 0:00	0.141021	0.117202	0.057924	0.096518	0.16279	0.090332	0.069862	0.041041	-0.02725	-0.01498	0.021625	0.07016	0.121318	0.162268	0.132692	0.063518	0.039508	0.004738	0.008591	-0.03089	-0.01324	-0.02218	0.097484	-0.00161
12/22/2015 0:00	0.003711	-0.01951	-0.0293	0.002673	0.009899	-0.02424	0.034313	-0.00812	-0.04741	-0.03643	0.019855	0.032566	0.018053	0.001945	0.070059	0.108896	0.061689	0.042382	-0.00174	0.01862	0.042474	0	0.075757	-0.00704
12/23/2015 0:00	0.052676	0.085663	0.11775	0.057041	0.053571	0.023747	-0.0091	-0.01759	0.026129	0.021071	0.025334	0.075356	0.062368	-5.4E-05	0	0	0	0.05141	-0.01522	-0.00788	-0.00607	-0.01212	0.003255	-0.02697
12/24/2015 0:00	0.015629	0.007628	0.011181	0.025094	0.027353	0.022602	0.0219	0.033476	0.032408	0.053416	0.064242	0.046811	0.010137	0.075881	0.092422	0.037562	0.003446	0.060423	0.059483	0.104273	0.125793	0	0.16668	0.069316
12/25/2015 0:00	0.070199	0.040546	0.015981	-0.02011	0.010388	0.017259	0.060235	0.087681	0.092541	0.036443	0.011664	0.065281	0.072437	0.07951	0.068825	0.072976	0.025189	-0.00431	-0.03117	-0.013	-0.00307	-0.02331	-0.01116	-0.00114
12/26/2015 0:00	-0.01836	0.025037	0.009736	0.006658	0.042806	0.110495	0.114486	0.116748	0.039873	0.024001	0.016524	0.053474	0.051623	0.000753	-0.00719	-0.00514	-0.02469	0.001621	-0.00853	0.073937	0.053833	0.057601	0.047381	-0.01702
12/27/2015 0:00	0.088902	0.110244	0.103513	0.078971	0.072128	0.098525	0.063167	0.110364	0.067691	0.133839	0.141078	0.12921	0.111344	0.133709	0.145811	0.13146	0.157273	0.153887	0.139946	0.094588	0.180426	0	0	0.226771
12/28/2015 0:00	0.167864	0.141718	0.130676	0.077049	0.064	0.057274	0.055547	0.035727	0.098176	0.08226	0.035613	0.009325	-0.00141	0.046	0.075361	0.05335	0.006654	-0.02698	-0.00252	0.054991	0.062557	0.107727	0	0.325839
12/29/2015 0:00	0.123564	0.013253	0.011105	-0.00713	9.34E-05	-0.02831	0.054199	0.058155	0.076443	0.053133	0.076378	0.136762	0.271495	0.325685	0.280947	0.198081	0.207264	0.144789	0.137762	0.096799	0.013066	0	0.196839	0.09046
12/30/2015 0:00	0.056606	0.020604	0.060969	0.197634	0.083108	-0.00555	0.03436	0.10923	0.087077	0.07091	0.084551	0.077481	0.080563	0.055556	0.056725	0.024351	0.039528	0.02876	0.046609	0.002816	0.062917	0.114992	0.076041	0.07985
12/31/2015 0:00	0.088633	0.077881	0.078598	0.09971	0.155461	0.074782	0.158557	0.094635	0.049942	0.019395	0.079429	0.170068	0.18112	0.20894	0.233461	0.246949	0.184615	0.147021	0.133599	0.124526	0.130317	0	0.295537	0.307859
2nd Highest =	**4.46**	**2.46**	**2.65**	**1.84**	**1.40**	**1.50**	**1.88**	**5.48**	**5.25**	**4.08**	**3.40**	**5.14**	**5.56**	**5.69**	**4.80**	**3.59**	**2.88**	**3.99**	**4.19**	**4.55**	**12.19**	**1.30**	**5.44**	**7.57**

3/1/2015 0:00	0.284452	0.217593	0.099125	0.034058	0.002358	0.103521	0.128684	0.162722	0.177036	0.196	0.109434	0.036139	0.106187	0.161674	0.177548	0.183287	0.104558	0.068899	0.114561	0.114899	0.167758	0	0.26116	0.300757
3/2/2015 0:00	0.190735	0.06137	0.058311	0.092927	0.02691	0.095246	0.097686	0.144783	0.25104	0.478707	0.829345	0	0.429356	0.122085	0	0.147368	0	0	0.016733	0.126031	0.121188	0.174824	0	0.063732
3/3/2015 0:00	0.065999	0.07426	0.168859	0.134327	0.054312	-0.05961	0	0.056926	0.000707	0.01939	0.104538	0.125411	0.24427	0.135122	0.188226	0.197303	0.100752	0.13598	0.073669	0.069588	0.056631	0	0.10537	0.045578
3/4/2015 0:00	0.089084	0.073196	0.076004	0.104216	0.053427	0.102543	0.024175	0.06784	0.048841	0.025822	0.028188	0	0	0.14563	0.100982	0.110473	0.117071	0.066064	0.081365	0.053189	0.096399	0.148835	0.100484	0.065296
3/5/2015 0:00	-0.00703	0.189431	0.289262	0.238253	0.170112	0.139075	0.085641	0.045131	0.020642	-0.02522	0.042923	0.031045	0.084241	0.199435	0.187732	0.153999	0.147515	0.197011	0.217949	0.226122	0.241474	0	0.824234	0.748455
3/6/2015 0:00	0.725315	1.189561	1.142363	0.911895	0.664577	0.665316	0.777059	0.939208	0.827718	0.727011	0.656514	0.573604	0.475566	0.407307	0.452186	0.544623	0.555189	0.570202	0.477007	0.498769	0.450249	0.465634	0.446705	0.543261
3/7/2015 0:00	0.719795	0.778997	0.935337	1.066318	0.714458	0.633882	0.944132	1.278243	1.707494	0.560412	0.406782	0.343207	0.290204	0.275077	0.308514	0.29131	0.257614	0.149067	0.267644	0.339737	0.317728	0.308174	0.285416	0.369802
3/8/2015 0:00	0.278841	0.192188	0	0	0	0	0	2.478772	2.097372	1.849246	1.600213	0	0	0	0	0	0	1.397029	2.213442	2.584178	1.866566	0	0.302697	0.134289
3/9/2015 0:00	0.215863	0.270247	0.28623	0.354225	0.658683	0.599516	0.723159	0.790945	1.240263	0	0	0	0	0.706506	0.444888	0.443116	0.419423	0.281506	0.16697	0.172216	0.109284	0.049471	0.172237	0.167094
3/10/2015 0:00	0.15223	0.234875	0.165612	0.193555	0.218938	0.175355	0.129428	0.097251	0.04949	0.067223	0.053267	0.11322	0.110119	0.065383	0.054527	0.083425	0.073763	0.091219	0.061387	0.084321	0.129431	0	0.085888	0.07879
3/11/2015 0:00	0.050684	0.044113	0.082246	0.079683	0.145024	0.141809	0.107287	0.09743	0.130816	0.105971	0.112991	0.089237	0.05005	0.113943	0.096252	0.024865	0.034162	0.025774	0.048217	0.03537	0.0462	0.043923	0.029625	0.083781
3/12/2015 0:00	0.035756	0.024009	0.130848	0.35189	0.235051	0.00594	0.712349	1.104464	0.630796	1.284052	1.371275	0.272784	0.20651	0.181103	0.095095	0.089049	0.083817	0.103694	0.16794	0.094004	0.103653	0	0.311961	0.156964
3/13/2015 0:00	0.140921	0.076489	0.073835	0.07592	0.057083	0.080753	0.068541	0.1079	0.055948	0.033836	0.043042	0.045409	0.039504	0.064703	0.053834	0.030676	0.020462	0.026657	-0.00031	0.03317	0.047671	0.079559	0.037367	0.029396
3/14/2015 0:00	0.000717	0.031783	0.055344	0.067337	0.048635	0.081192	0.089355	0.057635	0.093614	0.138735	0.134314	0.221563	0.192259	0.103028	0.097633	0.06897	0.125919	0.041326	0.070387	0.080745	0.095929	0.098934	0.12448	0.055179
3/15/2015 0:00	0.066427	0.042564	0.00209	0.014037	0.041674	0.061376	0.130569	0.133531	0.287794	0.938998	0.47963	0.333585	0.249831	0.139486	0.10863	0.04646	0.032601	0.001023	0.064982	0.080873	0.139843	0	0.311407	0.297088
3/16/2015 0:00	0.32205	0.336286	0.516137	0.42187	0.368485	0.077687	0.091523	0	0	2.388125	2.764695	0.399232	0.16212	0.23094	0.172476	0.21649	0.22122	0.281177	0.335605	0.330865	0.366732	0.358403	0.282828	0.226519
3/17/2015 0:00	0.238468	0.30231	0.25813	0.322808	0.277539	0.134119	0.195021	0.249999	0.248533	0.043825	0.013959	0.05849	0.055812	0.012932	0.022572	0.018708	0.001699	0.056443	0.080385	0.092404	0.098267	0	0.121706	0.206923
3/18/2015 0:00	0.181397	0.113207	0.07389	0.062852	0.102036	0.106144	0.117799	0.215109	0.253612	0.416742	0.420039	0.99181	2.054885	1.510145	1.880868	1.705633	1.405853	1.674059	0.487602	0.142671	0.120573	0.060378	0.033444	0.053233
3/19/2015 0:00	-0.02155	-0.03211	0.036125	0.114811	0.147418	0.107043	0.047259	0.002788	0.05503	-0.00343	-0.0221	-0.05482	-0.03569	0.021547	0.007184	0.033737	0.065427	0.025065	0.033871	0.036382	0.054802	0	0.118726	0.130583
3/20/2015 0:00	0.167484	0	0	0.650849	1.463215	0	0	0	0	0	0	0	0	0.021084	-0.01454	-0.01584	0.049065	0.080033	0.126087	0.089948	0.066514	0.063208	0.059005	0.098334
3/21/2015 0:00	0.082095	-0.00014	0.014065	0.007851	0.024699	0.0525	0.100197	0.171748	0.148758	0.137392	0.131196	0.082695	0.038814	0.013334	0.033862	0.014609	0.00671	0.026883	0.029827	0.074925	0.104492	0.311211	0.337363	0.396271
3/22/2015 0:00	0.412225	0.257486	0.120666	0	0	0	0	0.135983	-0.01346	0	0.029997	0.135474	0.001319	0.050139	-0.02446	-0.02637	-0.02348	-0.04266	0	0.2021	0.237447	0	0	0.03528
3/23/2015 0:00	0.128821	0.167432	0.011247	0.05171	-0.00579	-0.04155	0.0216	0.102401	0.128798	0.125908	0.055317	0.016217	0.069546	0.127361	0.085817	0.026842	0.018187	0	-0.02145	0.105351	0.136292	-0.02348	0.102378	0.07618
3/24/2015 0:00	0.104053	0.034141	-0.01257	0	0	1.550933	1.737552	0	0	0	0	0	0	0.04175	0.019322	0.046772	0.07405	0.10497	0.112812	0.198509	0.104657	0	0.030592	-0.00784
3/25/2015 0:00	0.048457	0.131217	0.110103	0.119919	0.081072	0.098618	0.009361	-0.01149	0.019935	0.030833	0.080537	0.113686	0.095572	0.12516	0.109281	0.139538	0.203115	0.175298	0.235372	0.298328	0.186376	0.12783	0.123274	0.141189
3/26/2015 0:00	0.113609	0.129356	0.102325	0.060798	0.036339	0.036265	0.002547	0.008682	0.037588	0.068948	0.085168	0.134487	0.187142	0.126772	0.11881	0.113158	0.072701	0.035584	0.058091	0.041048	0.093996	0	0.146432	0.12309
3/27/2015 0:00	0.084576	0.104854	0.083048	0.033891	0.017304	0.009543	0.021234	0.057618	0.040359	0.052333	0.081476	0.144038	0.298499	0.411464	0.533523	0.618774	0.228738	0.073554	0.035073	0.030666	0.021725	0.015072	0.005109	0.01748
3/28/2015 0:00	0.006791	0.05302	0.048995	0.093615	0.081642	0.072182	0.069394	0.140993	0.146331	0.24759	0.208782	0.282949	0.262835	0.170759	0	0.066499	0.098186	0.155723	0.220668	0.254416	0.313497	0.326108	0.252913	0.181169
3/29/2015 0:00	0.129077	0.12782	0.102695	0.07045	0.120835	0.493823	0.250589	0.457257	0.461128	0.133235	0.216057	0.455375	0.79139	0.649779	0.426125	0.468421	0.424437	0.552226	0.491431	0.339861	0.300267	0	0.145864	0.127701
3/30/2015 0:00	0.124708	0.114991	0.092745	0.096323	0.037607	0.009497	0.013134	0.011497	0.05315	0.063577	0.045377	0.067654	0.089681	0.182924	0.169892	0.128034	0.125931	0.077832	0.060235	0.154226	0.231639	0.232464	0.139421	0.067055
3/31/2015 0:00	0.045182	0.073493	0.102241	0.073448	0.007789	0.058734	0.163299	0.266826	0.282741	0.475908	0.329667	0.272152	0.536441	0.650219	0.573907	0.569255	0.760011	0.506664	0.609708	0.429214	0.558201	0	0.545876	0.46083
4/1/2015 0:00	0	0	0	0	0	0	0	0	0	0	0	0	0	0	0	0	0	0	0	0	0	0	0	0
4/2/2015 0:00	0.110973	0.087473	0.120806	0.105856	0.141567	0.14916	0.117268	0.030761	0.043972	0.073914	0.07422	0.160521	0.158832	0.134972	0.102144	0.192941	0.242729	0.18266	0.108834	0.052644	0.061683	0	0.1138	0.288353
4/3/2015 0:00	0.464454	0.378093	0.142635	0.020642	0.016361	0.0534	0.091732	0.138921	0.164427	0.115031	0.047071	0.068701	0.035298	0.059018	0.137855	0.208536	0.305781	0.184278	0.107755	0.061703	0.019901	0.028899	-0.00425	-0.00243

Centrevill, AL SEARCH Monitor - 2015 Hourly SO2 Data (ppb)

4/4/2015 0:00	0.006841	0.038498	0.078911	0.084313	0.116909	0.108619	0.115065	0.043898	0.09252	0.086194	0.159524	0.253842	0.292764	0.292432	0.279438	0.28267	0.328288	0.309433	0.232609	0.13414	0.193554	0.197886	0.110488	0.155006
4/5/2015 0:00	0.189265	0.387581	0.431362	0.26033	0.233628	2.259228	3.311454	1.463843	0.097736	0	0.087125	0.423684	0.252802	0.356116	0.324306	0.313395	0.39021	0.387666	0.364218	0.285483	0.232338	0	0.319676	0.34566
4/6/2015 0:00	0.32506	0.365047	0.325674	0.299561	0.302407	0.313089	0.299121	0.370395	0.370701	0.378855	0.230383	0.214276	0.175184	0.109453	0.153314	0.123275	0.032553	0.017211	0.03981	0.02823	0.047891	0.071989	0.205151	0.148518
4/7/2015 0:00	0.178653	0.176443	0.180387	0.210701	0.159763	0.175997	0.169852	0.164338	0.142504	0.188248	0.098895	0.054842	0.350074	0.052902	0.02699	0.042442	0.097473	0.052929	0.057348	0.102956	0.016953	0	0.052394	0.080183
4/8/2015 0:00	0.050523	0.06476	0.103133	0.119423	0.092261	0.122688	0.104418	0.154168	0.256625	0.171851	0.201573	0.105158	0.102536	0.078817	0.04054	0.067441	0.089623	0.110192	0.132544	0.065665	0.023388	0.144	0.147591	0.33141
4/9/2015 0:00	0.291189	0.235751	0.195349	0.310531	0.265118	0.156872	0.144521	0.090849	0.092339	0.035295	0.042465	0.007334	0.045423	0.030872	0.185665	0.25601	0.291433	0.36026	0.263221	0.299683	0.191379	0	0.106877	0.072205
4/10/2015 0:00	0.116841	0.288695	0.302948	0.14483	0.120049	0.119692	0.122318	0.202829	0.07338	0.087239	0.187938	0.038211	0.068624	0.051066	0.065707	0.098547	0.087732	0.078323	0.05545	0.077511	0.031063	0.062992	0.078936	0.098424
4/11/2015 0:00	0.096932	0.115152	0.143475	0.147768	0.088386	0.079593	0.132533	0.377805	0.52607	0.207797	0.237632	0.551612	0.381259	0.220667	0.208546	0.354772	0.143233	0.17793	0.129575	0.217243	0.230394	0.291326	0.302167	0.34944
4/12/2015 0:00	0.371168	0	0	2.609578	3.084682	3.073323	2.534544	0.916935	1.090514	0.281512	0.30706	3.312474	1.758219	1.396455	0.759849	0.391361	0.281707	0.196928	0.147791	0.116657	0.13934	0	0.134069	0.073221
4/13/2015 0:00	0.043513	0.067844	0.009327	0.012508	0.053748	0.073595	0.067785	0.111197	0.09528	0.117874	0.048696	0.045853	0.003821	0.017811	-0.00067	-0.04515	0	-0.05531	-0.03838	0.047935	0.037737	0.070083	0.104718	0.020995
4/14/2015 0:00	0.013233	0.076564	0.062673	0.09393	0.129065	0.092632	0.122604	0.172506	0.251802	1.372759	1.500656	0.192494	0.039149	0.062829	0.025942	0.024553	0.025329	0.083111	0.062592	0.130587	0.078578	0	0.105346	0.054317
4/15/2015 0:00	0.022272	-0.00238	0.028962	0.020192	0.041124	0.036397	0.081191	0.252206	1.15036	0.199829	0.098171	0.083705	0.113055	0.949424	4.077722	3.57746	0.96822	0.113614	0.112056	0.090395	0.048532	0.092733	0.106592	0.146739
4/16/2015 0:00	0.175444	0.174719	0.096679	0.037928	0.084052	0.088805	0.157969	0.218287	0.219792	0.104475	0.032398	0.071649	0.030108	-0.01881	0.000996	-0.01172	-0.04601	0.461353	0.363184	0.20803	0.680322	0	0	0
4/17/2015 0:00	0	0.051821	0.019183	0.163306	0.19352	0.034725	0.254741	0.491403	0.037896	0.131709	0.556856	0	0	0	0	0.211397	-0.01143	0.117931	0.069032	0.011934	0	1.204199	1.433681	2.069054
4/18/2015 0:00	0.884812	0.120889	0.096362	0.098704	0.106584	0.275564	0.416392	0.390754	1.663541	0.312073	0.173239	0.15646	0.15406	0.124749	0.075964	0.090487	0.031361	0.112281	0.18392	0.195238	0.170347	0.151491	0.145859	0.088228
4/19/2015 0:00	0.078695	0.09546	0.077432	0.08012	0.070383	0.070609	0.057746	0.080467	0.38887	0.154462	0.132996	0.117345	0.033487	0.110233	1.079655	0.048164	0.043837	0.094036	0.111844	0.113812	0.26395	0	0.185041	0.112182
4/20/2015 0:00	0.176544	0.235974	0.192649	0.46641	0.963349	0.751559	0.832167	0.454759	0.213939	0	0.171895	0.109457	0.045628	0.037978	0.016265	0.045407	-0.00723	0.00928	-0.01213	0.015168	0.04284	-0.01388	0.02276	0.143345
4/21/2015 0:00	0.130349	0.278815	0.164678	0.100637	0.263059	0.609581	0.306499	0.238651	0.154029	0.082624	0.012589	0.060163	0.049028	0.08079	0.135149	0.178129	0.102313	0.039694	0.060472	0.067048	0.051585	0	0.233242	3.270565
4/22/2015 0:00	3.176642	3.094771	2.35435	0.976899	0.707334	0.726361	0.591961	0.36117	0.245417	0.172798	0.081718	0.101062	0.089819	0.10504	0.128222	0.172874	0.204468	0.300446	1.705042	5.925961	3.806471	1.436211	0.994281	0.651519
4/23/2015 0:00	0.61298	0.813411	0.388746	0.966165	0.603179	0.38289	0.790208	1.042691	0.893473	0.390083	0.132313	0.580399	0.446498	0.291702	0.308226	0.341654	0.361344	0.232278	0.28371	0.438759	0.412356	0	0.143083	0.107831
4/24/2015 0:00	0.133897	0.229102	0.442854	0.599169	0.904819	0	0	0	0	0	0	0.278567	0.219227	0.257981	0.315684	0.27939	0.212958	0.217275	0.351016	0.980333	0.859095	0.811976	1.620029	1.407524
4/25/2015 0:00	1.06028	0.717474	0.342344	0.134394	0.084999	0.082809	0.012311	0	0.359784	1.104257	0.92298	0.154336	0.084986	0.492582	0.363808	0.244379	0.607944	0.357	0.161236	0.244749	0.225744	0.596513	0.905653	1.010016
4/26/2015 0:00	0.726315	0.468447	0.248755	0.203642	0.240201	0.270438	0.234213	0.24905	0.271576	0.215422	0.153786	0.126424	0.096513	0.086634	0.090616	0.065822	0.077563	0.099679	0.119428	0.117482	0.113458	0	0.106545	0.07396
4/27/2015 0:00	0.036483	0.021473	0.065216	0.077294	0.093396	0.05057	0.256074	0.483285	0.613797	0.924544	0.746665	0.36369	0.351839	0.349412	0.393934	0.605642	1.029689	0.714042	0.521176	0.525953	0.541596	0.857796	0.810639	0.659798
4/28/2015 0:00	0.490056	0.477332	0.478224	0.342286	0.246914	0.108824	0.44429	1.959898	2.449475	1.1692	0.612967	0.312617	0.245197	0.314646	0.36828	0.25149	0.222325	0.066633	0.045755	0.069218	0.067741	0	0.067804	0.091106
4/29/2015 0:00	0.069095	0.090363	0.055883	0.059338	0.118555	0.080683	0.066297	0.088365	0.149163	0.142226	0.093396	0.391511	0.279576	0.11736	0.048234	0.010483	0.040243	0.138825	0.3857	0.472268	0.346486	0.508206	0.892764	1.011051
4/30/2015 0:00	0.901102	0.606194	0.550931	0.454955	0.380468	0.31695	0.286527	0.476605	0.321751	0.368088	0.326453	0.301237	0.255996	0.264205	0.221135	0.122197	0.087508	0.072856	0.112822	0.165529	0.147592	0	0.517574	0.299222
5/1/2015 0:00	0.43557	0.798121	0.753603	0.893918	0.40207	0.243543	0.280891	0.468239	0.511577	0.269659	0.177811	0.11953	0.10417	0.052129	0.103435	0.097936	0.189641	0.1725	0.116283	0.103495	0.140278	0.180823	0.123131	0.31544
5/2/2015 0:00	0.421025	0.490134	0.460602	0.315126	0.284433	0.173769	0.134661	4.96099	5.163421	0.517647	0.226425	0.327034	0.269941	0.216591	0.200271	0.217396	0.359054	0.59768	0.408545	0.09149	0.090113	0.171354	0.141305	0.106736
5/3/2015 0:00	0.145777	0.223168	0.265554	0.193089	0.114354	0.017361	0.012996	0.442794	0	1.69352	1.045993	1.333437	0.516968	0.366071	0.502535	0.469083	0.492018	0.454311	0.407035	0.405063	0.3878	0	0.324147	0.359972
5/4/2015 0:00	0.306002	0.481624	1.0015	0.867422	0.677613	0.05527	0.363571	1.578828	1.673936	0.684881	0.381872	0.031165	0.035478	0.264356	0.22385	0.294655	0.440589	0.450132	0.399373	0.301618	0.325663	0.434794	0.733095	1.650378
5/5/2015 0:00	1.139493	0.179229	0	0.183207	0.083519	0.341296	0.05882	0.879157	0.739931	0.34341	0.255607	0.122716	0.026524	0.018747	0.027359	0.058047	0.083222	0.112598	0.128859	0.1619	0.152654	0	0.005041	0.033135
5/6/2015 0:00	0.026672	0	0	0.208232	0.265447	1.136011	1.699864	0.186862	0	0	0	0.045513	0.034087	0.149924	0.037056	0.050116	0.064948	0.199687	0.099123	0.033839	0	0	0.018306	0.041213
5/7/2015 0:00	-0.00802	0.027676	0.050079	0.665969	2.000396	1.145135	1.980131	1.533988	1.775186	0	0	0	0.060437	0.142843	0.086443	0.132271	0.133251	0.136061	0.089898	0.097466	0.10607	0	0.076049	0.179769
5/8/2015 0:00	0.163216	0	0	0.256588	0.015374	0	0	3.251525	2.29652	0.276075	0.26323	0	0	0.117526	0.09348	0.201448	0.19948	0.260233	0.21155	0.260888	0.263901	0.289833	0.262703	0.017714
5/9/2015 0:00	0.130019	0.189741	0.110993	0.049237	0.024057	0.322057	0.121599	0.462238	0.264855	0.4233	0.240502	0.283643	0	0	-0.01537	0.048617	0.079708	0.084173	0.089835	0.046362	0.018327	0.015339	0.055388	0.084036
5/10/2015 0:00	0.117488	0.094759	0.046127	0.153714	0.287073	0.29328	0.295318	0.377755	0.165739	0.009915	0.019752	-0.00465	-0.00646	-0.00177	0.026535	0.078727	0.134015	0.184641	0.178643	0.08258	0.054162	0	0.03963	0.017351
5/11/2015 0:00	0.050961	0.062094	0.016889	0.058803	0.042181	0.06252	0.114592	0.136868	0.207822	0.305742	0.252652	0.455573	0.342768	0.309943	1.274868	2.641868	3.062777	2.456706	1.024931	0.321434	0.153653	0.007811	0.063092	0.04982
5/12/2015 0:00	0.071338	0.052942	0.037526	0.036748	-0.00026	0.010123	0.01731	0.051167	0.210369	0.271276	0.144493	0.024986	0.040848	0.02355	0.062226	0.159725	0.145176	0.076819	0.094546	0.115926	0.118385	0	0.086919	0.046861
5/13/2015 0:00	0.08901	0.140677	0.163483	0.118134	0.01868	0.013049	0.071631	0.328306	0.611766	0.454537	0.328775	0.363347	0.432015	0.698298	0.696064	0.366075	0.311148	0.328979	0.33246	0.27206	0.18969	0.161552	0.146085	0.216596
5/14/2015 0:00	0.202417	0	0	0	0	0	0	0	0	0	0	0.225587	0.214141	0.419173	0.350639	0.232504	0.271698	0.277237	0.266714	0.323413	0.340165	0	0.082068	0.051371
5/15/2015 0:00	0.002237	-0.05066	-0.06275	0	-0.02792	-0.00151	-0.00625	-0.02676	0.00728	-0.00369	0.014075	0.051176	0.042115	0.022023	0.064671	0.085469	0.048788	0.05288	0.015297	-0.0142	-0.02562	-0.00833	-0.00308	0.024403
5/16/2015 0:00	-0.00969	0.020506	0.082406	0.093911	0.078651	0.12297	0.170036	0.243987	0.190201	0.005822	0.006782	-0.02491	-0.01879	0.030633	0.043419	0.068901	0.096356	0.103162	0.099974	0.157318	0.09538	0.025856	0.018677	0.017381
5/17/2015 0:00	-0.00835	-0.00319	0.03075	0.076159	0.113286	0.085817	0.099872	0.097985	0.056482	0.038939	0.019456	0.041265	0.057187	0.064226	0.077738	0.184324	0.190874	0.160355	0.133582	0.064709	-0.00497	0	0.040371	0.015843
5/18/2015 0:00	0.034392	0.022741	-0.00511	0.043863	0.041523	0.07734	0.076255	0.078787	0.037523	0.077043	0.033447	0.044761	0.076436	0.050764	0.470332	1.172179	1.733048	0.232192	0.083377	0.052226	-0.00263	-0.0297	-0.01447	-0.02505
5/19/2015 0:00	-0.01131	0.067084	0.14318	0.120936	0.164632	0.151478	0.206989	0.429257	0.342615	0.272153	0.242747	0.193359	0.105592	0.001462	-0.00246	0.058481	0.119805	0.148129	0.145503	0.10963	0.072899	0	0.053745	0.184782
5/20/2015 0:00	0.171609	0.123509	0.081273	0.063438	0.133524	0.091197	0.12455	0.169218	0.281807	2.677822	4.098593	0.340667	0.294253	0.202979	0.231948	0.185947	0.190892	0.027503	0.051259	-0.00828	-0.02753	0.007107	-0.00211	-0.00174
5/21/2015 0:00	0.003455	0.073938	0.114354	0.102902	0.133374	0.131936	0.149746	0.172138	0.169726	0.15915	0.111316	0.120482	0.109131	0.073162	0.06559	0.109021	0.161865	0.181228	0.194099	0.070816	0.059734	0	0.028351	0.050625
5/22/2015 0:00	0.048487	0.041781	0.035921	0.02709	0.038018	0.092408	0.115086	0.13988	0.184472	0.271669	0.309967	0.301824	0.167973	0.231858	0.339347	0.323606	0.398539	0.404148	0.376008	0.167907	0.2038	0.246375	0.207062	0
5/23/2015 0:00	0	0	0	0	0	0	0	0	0	0.117753	0.137728	0.361089	0.396279	0.453282	0.421591	0.419936	0.44076	0.41898	0.254858	0.179429	0.180309	0.180385	0.139801	0.26145
5/24/2015 0:00	0.30732	0.209302	0.182347	0.298833	0.250735	0.185372	0.191227	0.243417	0.215546	0.308023	0.187897	0.159276	0.204078	0.150833	0.111574	0.037916	-0.00257	-0.02232	0.031365	0.038744	0.045434	0	0.060638	0.06135
5/25/2015 0:00	0.054408	0.040785	0.051712	0.079398	0.068257	0.105638	0.133784	0.156521	0.209221	0.232915	0.164294	0.104816	0.020559	0.070207	0.05392	0.010627	-0.00854	-0.01415	0.002733	0.051295	0.067314	0.078577	0.052143	0.068003
5/26/2015 0:00	0.083614	0.085672	0.065741	0.105496	0.163241	0.188279	0.185801	0.154603	0.123129	0.075901	0.025338	0.042502	0.023885	-0.00172	0.008037	0.005941	-0.00029	-0.02123	-0.00766	0.025081	0.012958	0.009828	0.00166	-0.05256
5/27/2015 0:00	0.001831	-0.00779	-0.01646	-0.00055	-0.00203	-0.0231	0.030993	0.082884	0.080073	0.099666	0.074097	0.056827	0.066473	0.007601	0.109239	0.054637	0	-0.06084	-0.0422	-0.03375	-0.00219	0	0	1.875405
5/28/2015 0:00	2.363968	0	0	-0.04137	-0.02263	0.104509	0.05955	0.121409	0.15248	0.347252	0.33386	0.278693	0.122881	0.090828	0.086335	0.096141	0.093637	0.079636	0.08293	0.184159	0.180738	0	0.053446	0.041881
5/29/2015 0:00	0.050137	0.131641	0.138902	0.112649	0.090383	0.017612	0.057896	0.232753	0.187816	0.189822	0.11397	0.102451	0.158213	0.14064	0.158749	0.091535	0.197238	0.197078	0.352806	0.106189	0.163173	0.122171	0.040609	0.266931
5/30/2015 0:00	0.360689	0.330884	0.22106	0.074012	0.100877	0.095857	0.169142	0.845983	0.467821	0.212208	0.129268	0.113048	0.25606	0.04853	0.066714	0.083932	0.103568	0.205791	0.166624	0.160611	0.15693	0.092826	0.087639	0.075757
5/31/2015 0:00	0.122447	0.307475	0.382805	0.102703	0.031206	0.055577	0.150492	0.285101	0.174545	0.187315	0.248843	0.725192	1.098566	0.770921	0.570417	0.387526	0	0.269113	0.366844	0.086647	0.046163	0	0.028322	-0.00698
2nd Highest =	**2.36**	**1.19**	**1.14**	**1.07**	**2.00**	**2.26**	**2.53**	**3.25**	**2.45**	**2.39**	**2.76**	**1.33**	**1.76**	**1.40**	**1.88**	**2.64**	**1.73**	**1.67**	**1.71**	**2.58**	**1.87**	**1.20**	**1.43**	**2.07**

6/1/2015 0:00	0.028173	-0.0021	-0.01403	0.011563	-0.00919	-0.00229	0.011121	0.094326	0.113909	0.152175	0.266674	0.937491	0.29946	0.206492	0.105039	0.073728	0.037887	0.074994	0.040691	0.032473	0.051988	0.085781	0.14695	0.07734
6/2/2015 0:00	0.077748	0.028672	0.024522	0.100149	0.077634	0.075025	0.045175	0.042594	0.17673	0.178624	0.070431	-0.00651	0.086352	0.187533	0.132795	0.148924	0.062023	0.072528	0.100271	0.079544	0.062766	0	0.057017	-0.02567
6/3/2015 0:00	-0.0464	-0.02423	0.077016	0.117005	0.10684	0.112593	0.141324	0.581514	1.500844	0.890312	0.136444	0.091619	0.055005	0.048401	0.123257	0.154867	0.112001	0.126132	0.132827	0.076484	0.129503	0.130606	0.066084	0.024486

Centrevill, AL SEARCH Monitor - 2015 Hourly SO2 Data (ppb)

6/4/2015 0:00	0.02228	0.008775	0.030342	0.053865	0.080166	0.077228	0.07384	0.81904	1.407711	0.780365	0.61995	0.456014	0.108303	0.084575	0.090993	0.136643	0.007722	0	0.12366	0.300314	0.417114	0	0.748795	0.298257
6/5/2015 0:00	0.163718	0	0	0.943904	0	0.608054	0.615924	0.399132	0.270157	0.10416	0.017906	0.155123	0.127933	0.213438	0.149223	0.143704	0.155872	0.098658	0.063068	0.085514	0.085262	0.134702	0.147532	0.123676
6/6/2015 0:00	0.049062	0.126112	0.147289	0.164295	0.13668	0.164869	0.32649	0.88807	0	0.808689	0.423387	0.30844	0.343301	0.235571	0.179199	0.191306	0.197258	0.253601	0.315548	0.24109	0.224116	0.144228	0.171502	0.202401
6/7/2015 0:00	0.130651	0.122025	0.156779	0	0	3.005217	4.236927	0	0.301501	0	0	0	0	0.005068	0.085397	0.306131	0.244815	0.218538	0.232765	0.205575	0.103747	0	0.21566	0.18047
6/8/2015 0:00	0.167356	0.185919	0.153869	0.19334	0.195172	0.193166	0.396629	0.28919	0.364596	0.353116	0.105095	0.14824	0.242291	0.21887	0.103002	0.013699	0.025389	0	0	0.133979	0.34624	0	0	0.104541
6/9/2015 0:00	0.022227	0.147538	0.1576	0.312102	0.277797	0.255486	0.209703	0.307496	0.545417	0.478999	0.376987	0.195241	0.124778	0.108846	0.117242	0.084985	0.098258	0.088303	0.113266	0.156927	0.326768	0	0.082681	0.216695
6/10/2015 0:00	0.184287	0.255886	0.421891	0.25024	0.291754	0.218758	0.055485	0.092989	0.086308	0	0	0	0.313052	0.177449	0.161928	0.092738	0.062507	0	0.226173	0.704817	0.617695	0.826048	0.48545	0.576975
6/11/2015 0:00	0.111302	0.192295	0.194498	0.158162	0.263451	0.053186	0.09209	0.140225	0.195435	0.271053	0.33254	0.000622	0.05789	0	0.039011	0.037981	0.061544	0.109418	0.151636	0.142934	0.060203	0	0.019824	0.119695
6/12/2015 0:00	0.125715	0.163966	0.166848	0.071172	0.146037	0.330161	0.361895	0.4856	0.339457	0	0	0	0	0	0	2.331416	0.712623	0.063551	0.005215	0.022582	0.017893	0.010993	0.170277	0.246454
6/13/2015 0:00	0.174179	0.330644	0.155316	0.178469	0.050397	0.102855	0.158651	0.23073	0.269791	0.215873	0.191988	0.140433	0.035833	0.082862	0.064484	0.064611	0.104362	0.02401	0.060393	0.130915	0.040594	0.064284	0.070489	0.101996
6/14/2015 0:00	0.059465	0.017336	0.07169	0.066857	0.271568	0.140726	0	0	0	-0.02523	0.013958	0.033689	0.010625	0.157703	0.191481	0.161899	0.20039	0.325622	0.425792	0.311444	0.168147	0	0.148717	0
6/15/2015 0:00	0.063912	0.134927	0	0.022794	0	0.230202	0.053706	0.352869	0.253444	0.155542	0.172186	0.245592	0.196315	0.419212	0.258249	0.053434	0	0.036728	0.134634	0.131033	0.164994	0.184445	0.203023	0.171048
6/16/2015 0:00	0.149402	0.170373	0.162463	0.105031	0.114311	0.091997	0.062982	0.12258	0.078733	0.661968	0.376368	0.279772	0.133894	0.312433	0.951519	1.328495	0.843418	0.182792	0.128179	0.107732	0.056912	0	0.080707	0.065961
6/17/2015 0:00	0.015044	0.005035	0.097395	0.136597	0.065818	0.046378	0.153912	0.279587	0.368934	0.318029	0.232292	0.165969	0.21958	0.253978	0.503649	1.16416	0.653408	0.191964	0.191432	0.213167	0.17934	0.159831	0.163912	0.189851
6/18/2015 0:00	0.17361	0.110435	0.097738	0.068157	0.023008	0.055348	0.454937	0.326823	0.427192	0.419121	0.946528	0.603778	0.181779	0.177844	0.119459	0.162952	0.193312	0.497182	0.590151	1.087613	0	0	0	0.619383
6/19/2015 0:00	0.270951	0.294317	0.423983	0.268325	0.230366	0.231222	0.379929	1.140645	0	0.722852	0.164059	0.163363	0.110445	0.048639	0	0.123661	0.378021	0.3335	0.403055	1.047246	0.255229	0.08442	0.035379	0.020924
6/20/2015 0:00	0.011178	0.001709	0.048173	0.127917	0.636654	2.216991	2.5295	1.757588	0.408675	0.20764	0.210907	0.176429	0.079369	0.114997	0	0	0.226947	0.930902	3.99652	3.255126	2.223403	1.106779	0.661997	0.602058
6/21/2015 0:00	2.056163	1.238076	1.216414	0.91042	0.715387	0.612214	0.47145	0.416857	0.400977	0.206393	0.123131	0.098519	0.192887	0.168365	0.187068	0.087947	0.059929	0.058356	0.114758	0.255471	0.155606	0	0.237087	0.125242
6/22/2015 0:00	0.160964	0.255068	0.301445	0.137477	0.160004	0.169246	0.164001	0.145059	0.104517	0.094977	0.139599	0.124162	0.090021	0.125337	0.05828	0.09001	0.042813	0.3305	0.35835	0.161504	0.086043	0.108322	0.082658	0.111428
6/23/2015 0:00	0.148279	0.163598	0.181064	0.150729	0.166101	0.096819	0.109507	0.282913	0.254685	0.352177	0.37578	0.337116	0.315333	0.234362	0.187924	0.235052	0.242897	0.180288	0.165541	0.122604	0.076522	0	0.237655	0.189665
6/24/2015 0:00	0.146168	0.160923	0.134263	0.135152	0.13325	0.12464	0.148946	0.215041	0.3165	0.281671	0.262133	0.233618	0.273133	0.312441	0.422168	0.356258	0.403629	0.337275	0.196482	0.086249	0.137555	0.057907	-0.01651	0.02473
6/25/2015 0:00	0.058671	0.033666	0.038347	0.117209	0.000719	0.278428	0.505426	0.42859	0.283911	0.230086	0.25432	0.351054	0.301116	0.267896	0.284376	0.166287	0.083643	0.066196	0.088004	0.032936	0.042086	0	0.264047	0
6/26/2015 0:00	0.953828	2.174438	2.042408	1.369809	0.936721	0.624004	0.590624	0.483841	0.363323	0.266761	0.312988	0.24576	0.198179	0.024096	0.026183	0.057839	0.064068	0.100459	0.153218	0.152998	0.055557	0.079688	0.116669	0.108618
6/27/2015 0:00	0.097723	0.233495	0.349591	1.012967	1.227503	1.541386	1.166812	0.491577	0.237174	0.15281	0.107424	0.10119	0.09093	0.092604	0.075867	0.061571	0.011863	0.026521	0.046588	0.033521	0.026514	-0.0099	0.010732	0.039964
6/28/2015 0:00	0.129138	0.137793	0.059107	0.08161	0.081865	0.053442	0.347251	0.433685	0.445236	0.288823	0.253109	0.18466	0.119305	0.177586	0.14062	0.103749	0.054306	0.048468	0.047323	0.028722	0.026267	0	0.080444	0.107032
6/29/2015 0:00	0.059393	0.087546	0.285758	0.25538	0.244414	0.038927	0.072924	0.645709	0.463506	0.18532	0.191065	0.136743	0.06757	0.097167	0.085318	0.08071	1.10428	5.777258	2.072227	0.215653	0.110321	0.114304	0.164768	0.121627
6/30/2015 0:00	0.160087	0.107926	0.049574	0.051609	0.163987	0.214076	0.583589	0.078064	0.034625	0.055323	0.037407	0.160114	1.196225	1.769804	1.559109	2.096538	1.884402	1.04797	1.826785	0.947555	0.35044	0	0.200932	0.230589
7/1/2015 0:00	0.723285	0.764879	0.449561	0.456923	0.673563	0.500643	0.596533	0.785914	0.558156	0.353757	0.166345	0.154074	0.164308	0.122752	0.127126	0.141351	0.077234	0.674353	4.622274	1.88398	0.693665	0.250253	0.278216	0.113808
7/2/2015 0:00	0.176686	0.086081	0.020894	0.03422	0.125368	0.219234	0.70484	1.626361	2.560204	3.191046	3.66698	3.528168	0.763831	0.189997	0.109525	0.580488	2.724114	7.981886	1.779538	0.319172	0.378517	0	0.730017	4.024852
7/3/2015 0:00	2.851766	1.652334	0.671763	0.472416	0.594721	1.496354	2.877151	3.728204	3.909477	1.373958	0.695744	0.425679	0.45306	0.420953	2.139534	3.189639	0.210164	0.3012	0.17332	0.178163	0.190657	0.121671	0	0.052278
7/4/2015 0:00	0.002952	0.056859	0.123584	0.175088	0.124181	0.127728	0.686565	1.446142	0.167344	0.126654	0.043354	0.103583	0.140142	0.131163	0.025748	0.042733	0.033401	0.06878	0.106476	0.084669	0.003418	0.009018	0.035549	0.030705
7/5/2015 0:00	0.036044	0.140661	0.371062	0.780589	0.394917	0.318705	0.092658	0.073843	0.110093	0.069503	0.075528	0.195877	1.50671	0.149245	0.126749	0.133761	0.061421	0.346779	1.530851	2.883671	0.756782	0	0.173658	0.061425
7/6/2015 0:00	0.068102	0.098577	0.099554	0.601376	0.336662	0.088684	0.645966	1.130966	1.199989	0.796787	0.568266	0.539062	1.322391	1.173645	0.156553	0.040353	0.102762	0.146422	0.171697	0.120661	0.163349	1.386537	2.243529	1.878951
7/7/2015 0:00	1.087216	0.476212	0.298506	0.286363	0.412973	1.199871	0.908776	2.977189	5.6402	1.346981	0.354535	0.980274	6.239888	1.141871	1.21124	0.148836	0.185436	0.115852	0.14539	0.748404	0.783912	0	0.241141	0.244722
7/8/2015 0:00	0.215279	0.215758	0.708321	2.482513	1.355161	1.684992	1.745985	0.721726	0.374444	0.229112	0.125584	2.118068	0.612151	0.143919	0.144256	0.11542	0.128053	0.138365	0.172174	0.203905	0.181924	0.152588	0.16115	0.161368
7/9/2015 0:00	0.101535	0.092862	0.103534	0.163304	0.389296	0.263857	0.475168	0.336336	0.208676	0.224124	0.283105	0.263364	0.251998	0.225252	0.224694	0.162925	0.159406	0.121226	0.194372	0.305266	0.496671	0	0.082181	-0.00489
7/10/2015 0:00	0.014455	-0.02614	0.02539	0.078336	0.205463	0.157764	0.327501	1.027139	0.64015	0.403945	0.304045	0.270069	0.201229	0.203947	0.240995	0.291336	0.033421	0.070789	0.061064	0.139871	0.113864	0.12225	0.412345	0.530358
7/11/2015 0:00	0.483417	0.392781	0.295653	0.109154	0.134471	0.274876	0.190161	0.13566	0.146861	0.146922	0.053635	0.0652	0.092761	0.115797	0.158713	0.182958	0.244597	0.239002	0.191622	0	0.184381	0.170616	0.186649	0.187597
7/12/2015 0:00	0.152352	0.214075	0.211336	0.243293	0.229775	0.03902	0.184433	0.329899	0.409248	0.329017	0.214524	0.191686	0.241436	0.168697	0.108392	0.115107	0.101547	0.036199	-0.00814	0.052348	0.02725	0	0.049541	0.079155
7/13/2015 0:00	0.139475	0.185678	0.074072	0.073631	0.072138	0.286651	0.58547	0.215154	0.110265	0.206055	0.119025	0.027057	-0.00112	0.036718	0.094142	0.039988	0.029733	0.02517	0.044772	0.066464	2.775913	4.989628	1.924239	0.497312
7/14/2015 0:00	0.088071	0.084009	0.095628	0.09254	0.052892	0.067923	0.137861	0.214453	0.25915	0.192673	0.179125	0.247151	0.214208	0.175144	0.111654	0.085339	0.334245	1.299578	3.629341	1.013701	0.070302	0	0.04762	0.054975
7/15/2015 0:00	0.113702	0.092426	0.076626	0.033196	0.036082	0.12087	0.175489	0.193763	0.296373	0.459499	0.339302	0.318105	0.276765	0.292139	0.256474	0.223977	0.051246	0.049654	0.026935	0.093594	0.060191	0.00306	-0.00086	-0.03316
7/16/2015 0:00	0.019451	0.014438	0.078391	0.075891	0.068474	0.117386	0.057354	0.170176	0.128263	0.23406	0.285615	0.297284	0.288126	0.203	0.15985	0.124779	0.145149	0.120996	0.158967	0.143939	0.085171	0	0.103719	0.100924
7/17/2015 0:00	0.10353	0.058293	0.05819	0.002127	0	0.037128	0.089242	0.694366	0.165787	0.304047	0.326179	0.169529	0.142029	0.099739	0.20466	0.167946	0.129934	0.079486	0.154711	0.171193	0.142334	0.124762	0.152094	0.141258
7/18/2015 0:00	0.036517	0.398305	1.717779	1.159348	1.591648	1.305613	0.603854	0.517177	0.203209	0.052167	-0.00817	0.170916	0.199404	0.07709	0.088235	0.097107	0.101423	0.144974	0.081676	0.074916	0.045812	0.059718	0.024545	0.039102
7/19/2015 0:00	0.124176	0	0	0.176465	0	1.11073	0.902375	0.60723	0.5548	0.299073	0.117855	0.119157	0.332954	0.021549	0.003078	-0.00109	0.125155	0.208853	0.33549	0.054496	0.051105	0	0.085697	0.051913
7/20/2015 0:00	0.036092	0.015356	0.248246	0.306886	0.171059	0.190024	0.257015	0.246904	0.153623	0.270213	0.289884	0.22104	0.191014	0.109349	0.077971	0.127431	0.147741	4.006273	2.22308	0.552901	0.235105	0.135129	0.492794	0.65139
7/21/2015 0:00	0.314782	0.290486	0.319791	0.357166	0.215751	0.216086	0.292822	0.161944	0.181019	0.119322	0	0	0	0	0	0	0	0	0	0	0	0	0	0
7/22/2015 0:00	0	0	0	0	0	0	0	0	0	0	0	0	0	0.157715	0.194025	0.238678	0.026972	0.126097	0.077031	0.059636	0.139472	0.053699	0.048099	0.01662
7/23/2015 0:00	0.02223	0.009685	0.013244	-0.02036	-0.03922	0.026725	0.057568	0.502903	0.398447	0.263302	0.153535	0.110349	0.13005	0.035734	0.126967	0.079881	0.094637	0.093527	0.024368	-0.01252	-0.00578	0	0.192929	0.074502
7/24/2015 0:00	0.019705	0.098536	0.096717	0.068165	0.075345	0.022746	0.063305	0.286169	0.346387	0.344797	0.181479	0.211684	0.158759	0.132287	0.135429	0.109826	0.11969	0.093782	0.059158	0.040909	0.057142	0.083979	0.063343	0.012555
7/25/2015 0:00	0.014503	0.033033	0.039332	0.084615	0.064097	0.044649	0.033061	1.268511	1.458829	0.607614	0.477216	0.342418	0.178403	0.1333	0.088137	0.13476	0.25266	0.211206	0.192659	0.15955	0.126976	0.056049	0.11305	0.240305
7/26/2015 0:00	0.456443	0.238221	0.123816	0.118076	0.138373	0.139407	0.479382	0.195166	0.096123	-0.03285	0	0	0.018917	0.183055	0.236817	0.177271	0.041655	-0.01842	0.036511	0.086336	0.079789	0	0.013465	0.114823
7/27/2015 0:00	0.106878	0.080545	0.105787	0.058416	0.009658	0.260674	0.900564	1.345536	0.793605	0.345196	0.273081	0.166112	0.106048	-0.00717	0.045797	0.001693	-0.02413	0.002509	0.051112	0.03088	0.062896	0.069787	0.15233	0.058483
7/28/2015 0:00	0.040609	0.0385	0.13976	0.078582	-0.03049	0.038654	0.214855	0.153602	0.061642	0.027422	0.15872	0.504791	0.214584	0.09158	0.036985	0.018166	0.027577	0.092379	0.111761	0.106094	0.018173	0	0.133034	0.081273
7/29/2015 0:00	0.023321	0.104144	0.084831	0.125749	0.086039	0.158819	0.334585	0.546015	0.390621	0.788552	0.495844	0.523231	0.546703	0.667401	0.503164	0.232675	0.171887	0.18317	0.232114	0.251413	0.174078	0.222458	0.223579	0.243571
7/30/2015 0:00	0.175305	0.11541	0.199921	0.116385	0.150794	0.133963	0.19717	0.241298	0.394446	0.28313	0.297778	0.273807	0.347821	0.251234	0.247812	0.138857	0.178328	0.168191	0.124181	0.222767	0.279811	0	0.166307	0.26771
7/31/2015 0:00	0.207505	0.407394	0.339299	0.378691	0.440914	0.501735	0.621969	0.712281	0.746193	0.681393	0.647831	0.382713	0.346689	0.409837	0.553561	0.600562	0.462463	0.315589	0.354035	0.431214	0.311469	0.266934	0.265791	0.392515
8/1/2015 0:00	0.61565	0.948642	1.261962	1.816692	1.519849	1.316621	1.311756	0.769824	0.870933	0.699611	0.45248	0.562488	0.420069	0.412306	0.368331	0.319711	0.208202	0.131036	0.16313	0.224067	0.18333	0.212511	0.269191	0.357313
8/2/2015 0:00	0.539206	0.887668	1.051916	1.028867	1.117684	0.71339	0.865642	1.029684	0.783028	0.835565	0.724601	0.513662	0.281563	0.602957	0.538983	0.264673	0.274109	0.252148	0.169979	0.172609	0.210522	0	0.527925	0.37268
8/3/2015 0:00	0.37754	1.141137	1.926272	2.792286	2.019241	1.131147	1.659183	2.2908	3.864447	0.685156	0.379024	0.331491	0.407599	0.52115	0.421831	0.322695	0.355701	0.286814	0.276428	0.371291	0.534386	0.465683	0.40585	0.358844
8/4/2015 0:00	0.306042	0.176892	0.210845	0.460182	0.610821	0.666554	0.54089	0	0	0	0	0.765062	0.367077	0.258735	0.245387	0.223573	0.530593	1.091354	0.557269	0.517164	0.645893	0	0.439995	0.473807
8/5/2015 0:00	0.46457	0.538352	0.706044	0.724384	0.546036	0.293187	0.386532	0.346235	0.242835	0.238358	0.286962	0.262061	0.237029	0.132178	0.130451	0.106192	0.090029	0.089004	0.03382	0.056861	0.085717	0.134278	0.121314	0.105041
8/6/2015 0:00	0.092132	0.054854	0.050874	0.08462	0.128501	0.456942	0.35937	0.41916	0.351596	0.204757	0.209537	0.205978	0	3.158309	3.555387	0	0	0.270509	0.157824	0.107297	0.060522	0	0.02549	0.025426

Centrevill, AL SEARCH Monitor - 2015 Hourly SO2 Data (ppb)

8/7/2015 0:00	0.018925	0.087143	0.491382	0.312107	0.303073	0.157534	0.169339	0.155916	0.13841	0.322534	0.325793	0.387829	0.515715	0.385355	0.27391	0.178787	0.153267	0.111423	0.032861	-0.03268	-0.00781	-0.00037	0.02126	0.039351
8/8/2015 0:00	0.052774	0.012443	-0.01918	-0.01333	-0.03513	0.015553	0.050171	0.006028	0.002195	0.036233	0.098725	0.221774	0.223614	0.228435	0.149656	0.205245	0.169635	0.260081	0.376189	0.123414	0.055664	0.058877	0.039322	-0.0147
8/9/2015 0:00	0.095646	0.085357	0.062409	-0.02177	0	0.054378	0.211522	0.921081	0.842424	0.217524	0.094147	0.059186	0.037869	-0.01946	0	-0.02056	0.034497	0.109987	0.094975	0.0737	0.081577	0	0.121263	0.121642
8/10/2015 0:00	0.103578	-0.01298	0.040898	0.081944	0.147673	0.13885	0.073797	0.742471	1.314439	0.347599	0.19914	0.214323	0.200843	0.311399	0.234407	0.156226	0.136931	0.249642	0.328202	0.338906	0.338152	0.230201	0	0.126642
8/11/2015 0:00	0.156459	0.099978	0.092981	0.102869	0.068665	0.103277	0.068923	0.630311	0	0.202038	0.342056	0.306826	0.162533	0.142818	0.088458	0.138753	0.16727	0.131572	0.10219	0.071583	0.048031	0	0.106011	0.111298
8/12/2015 0:00	0.099188	0.076235	0.05027	0.031388	0.062301	0.102715	0.23671	0.531565	0.36392	0.209624	0.109028	0.366531	0.129848	0.099006	0.215309	0.192305	0.206886	0.186755	0.172845	0.126397	0.104554	0.097206	0.122971	0.262213
8/13/2015 0:00	0.345998	0.597559	0.807479	1.68086	1.614536	1.802822	2.250883	1.420917	0.774687	0.499527	0.316589	0.176771	0.107263	0.082481	0.031136	0.088625	0.20012	0.207592	0.197658	0.183612	0.210245	0	0.156999	0.11956
8/14/2015 0:00	0.154333	0.151816	0.377718	1.003752	0.732781	0.952025	0.951038	0.201811	0.181877	0.365101	0.386852	0.41316	0.370009	0.360551	0.259798	0.124698	0.081637	0.099488	0.135516	0.099589	0.099035	0.103937	0.075647	-0.00247
8/15/2015 0:00	0.010094	0	0	1.122579	0.568091	0.080579	0.105378	0.26927	0.252627	0.124008	0.028826	0.166554	0.269517	0.134645	0.119456	0.133875	0.192393	0.246435	0.30145	0.356016	0.233557	0.157568	0.089699	0
8/16/2015 0:00	0	3.186243	1.698684	0.017569	0	-0.00925	-0.00758	0.03309	-0.05067	0.035463	0.090131	0.124465	0.130071	0.059751	0.032891	0.04468	0.068427	0.049553	0.038392	0	0.138874	0	0.134395	0
8/17/2015 0:00	-0.01422	0.050214	0.011212	0.057031	0.078459	0.064686	0.15482	0.122836	0.130155	0.05748	0.047452	0.070667	0.0565	0.017798	0.036012	0.043666	0.027436	0.08021	0.041086	0.082733	0.041939	0.030466	0.284462	0.246975
8/18/2015 0:00	0.207659	0.143062	0.061079	0.039617	0.058431	0.136218	0.147041	0.133088	0.282307	1.194006	2.653534	5.06651	5.540312	3.951733	3.792726	6.746667	7.055078	0.70682	0.247704	0.254365	0.100721	0	0.071518	-0.00251
8/19/2015 0:00	0.038279	0.078037	0.011723	-0.0028	0.049114	0.055444	0.061246	0.105363	0.205443	0.09185	0.084694	0.097358	0.106579	0.605048	0.269952	0.065852	-0.00224	0.024673	0.07473	0.076823	0.67794	0.252268	0.084935	0.081804
8/20/2015 0:00	0.037709	-0.00105	0.085476	0.066242	0.079493	0.191589	0.896323	2.408409	3.264733	1.360322	0.654134	0.151076	0.116856	0.151884	0.122896	0.515278	0.015593	0.060754	0.128159	0.173951	0.114018	0	0.099401	0.038125
8/21/2015 0:00	-0.01391	0.000837	-0.02135	-0.0171	0	-0.01971	0	0.018817	0.007821	0.013279	0.128498	0.196672	0.086371	0.102915	0.191455	0.15898	0.156267	0.098125	0.090276	0.030874	0.107079	-0.00127	-0.00648	1.068095
8/22/2015 0:00	2.236934	0.725275	0.801251	1.009111	0.401645	0.55469	0.73698	0.348531	0.677118	0.132464	0.065568	0.105753	0.04209	0.077279	0.111735	0.17082	0.057949	0.015384	0.089831	0.082789	0.069546	0.049077	0.066479	0.040016
8/23/2015 0:00	-0.01624	0.010636	0.020669	0.305601	0.397787	0.062498	0.05561	-0.05072	-0.01847	0.079724	0.034281	0.083321	0.093139	0.081077	0.058828	0.083798	0.083052	0.060109	0.061118	0.074177	0.083919	0	0.078803	0.104698
8/24/2015 0:00	0.093352	0.06	0.084238	0.084991	0.096915	0.086501	0.08677	0.125629	0.092196	0.07509	0.059596	0.050425	0.070564	0.051727	0.049773	0.057204	0.059477	0.044056	0.083943	0.078271	0.096445	0.155635	0.172651	0.112939
8/25/2015 0:00	0.098129	0.090988	0.111079	0.118826	0.137764	0.11351	0.130402	0.081383	0.008789	-0.04687	0	0	0.179598	0.094356	0.086826	0.073236	0.074015	0.062133	0.041548	0.037495	0.078108	0	0.071025	-0.00829
8/26/2015 0:00	0.015541	0.030961	0.066378	0.060851	0.06205	0.027613	0.054486	0.093784	0.095797	0.039469	0.01183	0.057915	0.096743	0.068028	0.084947	0.15954	0.167865	0.217807	0.215313	0.222808	0.194007	0.120289	0.152633	0.133531
8/27/2015 0:00	0.125278	0.125583	0.145827	0.068551	0.026234	0.197988	0.151713	0.253165	0.290982	0.335393	0.310521	0.254003	0.237125	0.27572	0.352405	0.4043	0.370354	0.264613	0.237846	0.196148	0.130542	0	0.13859	0.160825
8/28/2015 0:00	0.146176	0.035838	0.058359	-0.02126	-0.00233	0.085403	0	1.98291	0.575253	-0.0043	0.058318	0.256968	0.210368	0.17321	0.301046	0.229361	0.159523	0.110299	0.042035	0.000991	0.023392	0.029625	0.058809	0.124244
8/29/2015 0:00	0.105229	0.085362	0.10694	0.080341	0.116652	0.083146	0.083037	0.154599	0.17709	0.156475	0.158964	0.127431	0.110275	0.147003	0.150575	0.15687	0.140426	0.097308	0.037423	0.013151	0.330267	0.34609	0.459259	0.495879
8/30/2015 0:00	0.307288	0.224802	0.159255	0.079909	0.092281	0.008898	-0.04043	0.459065	0.526068	0.085524	0.1027	-0.00667	0.003174	0.029452	0.099358	0.062797	0.04659	-0.03467	0.00419	-0.00117	0.051472	0	0.090806	0.050034
8/31/2015 0:00	0.015213	-0.01009	0	0.067596	0.331881	0.533342	0.226963	0.152298	0.622317	0.947961	1.868187	1.074918	0.213339	0.117621	-0.00486	-0.00435	0.044383	0.019002	-0.04871	0	0	0	0	0
2nd Highest =	**2.24**	**2.17**	**1.93**	**2.48**	**1.61**	**2.22**	**2.88**	**2.98**	**3.91**	**1.37**	**2.65**	**3.53**	**5.54**	**3.16**	**3.56**	**3.19**	**2.72**	**5.78**	**4.00**	**2.88**	**2.22**	**1.39**	**1.92**	**1.88**

9/1/2015 0:00	0	0	0	0	0	0	0	0	0	0	0	0	0	0.302458	0.149172	-0.00837	0	0.212012	0.105465	0.076876	0.065852	0	-0.02399	0
9/2/2015 0:00	0	0	0	0	0	0	0	0	0	0	0	0.400646	0.647393	1.280594	1.150455	0.715072	0.682484	0.447989	0.348111	0.283405	0.151487	0.154767	0.255986	0.317444
9/3/2015 0:00	0.386676	0.35584	0.192571	0.094921	0.145142	0.243741	0.271089	0.558079	0.818396	0.78308	0.9534	1.237358	0.568031	0.275257	0.175759	0.241551	0.15121	0.224651	0.222896	0.224197	0.243361	0	0.088471	0.142996
9/4/2015 0:00	0.142631	0.105404	0.054681	0.09286	0.072918	0.076027	0.139026	0.225463	0.293676	0.344287	0.349702	0.329637	0.233269	0.191062	0.167097	0.212484	0.180898	0.142773	0.115286	0.1507	0.124975	0.112474	0.16968	0.117989
9/5/2015 0:00	0.180933	0.135214	0.147541	0.188025	0.139096	0	0	2.061899	1.758253	0.18323	0.202528	0.164474	0.129535	0.109466	-0.00221	-0.00181	0.058585	0.33687	0.921607	0.597976	1.369355	0.579687	0.322493	0.278321
9/6/2015 0:00	0.261259	0.122163	0.071254	0.074198	0.050035	0.097424	0.053803	0.086429	0.068854	0.167959	0.198269	0.262469	0.173716	0.079901	0.022971	0.201708	0.175378	0.0591	0.008637	0.018559	0.08926	0	0.134087	0.054862
9/7/2015 0:00	-0.03725	-0.01225	0	0.793206	0.645732	0.755682	1.190482	0.143172	-0.02162	0.045983	0	0.435705	0.687042	0.47287	1.590798	1.642105	1.375912	1.020424	1.020993	0.338595	0.132253	0.892478	0.844497	0
9/8/2015 0:00	0	0.092031	-0.00226	-0.02393	0	0.833042	0.681427	0.314025	0.035622	-0.02135	-0.01881	0.05937	-0.01986	-0.00181	0.032007	0.054207	0.0605	0.129529	0.134857	0.093571	0.040373	0	0.028276	0.074834
9/9/2015 0:00	0.107962	0.121832	0.153289	0.079457	0.104217	0.072766	0.069632	0.400698	0.611413	0.568988	0.521862	0.420455	0.33649	0.298771	0.719804	0.453458	0.313828	0.24598	0.106114	0.089464	0.087676	0.071474	0.061654	0.061916
9/10/2015 0:00	0.039704	0.056259	0.05554	0.077535	0.121273	0.132757	0.143053	0.141922	0.15372	0.18691	0.192553	0	0.248624	0.106685	0.121002	0.108146	0.106395	0.102799	0.092117	0.378178	0.156466	0	0.087217	0.095313
9/11/2015 0:00	0.032436	0.050349	0.035282	0.023517	-0.0043	0.017449	0.065632	0.19952	0.265444	0.183391	0.114755	0.115329	0.157815	0.292828	0.269368	0.249421	0.183697	0.160055	0.16522	0.091643	0.092826	0.060551	0.043147	0.064809
9/12/2015 0:00	0.051346	0.050321	0.030025	0.037706	0.069716	0.030022	0.078404	0.137071	0.115867	0.097471	0.055468	0.069095	0.100854	0.121618	0.151307	0.132885	0.068775	0.088442	0.150091	0.119998	0.093686	0.034051	0.011395	0.003348
9/13/2015 0:00	0.016544	0.04095	0.121332	0.079157	0.05159	0.063571	0.1037	0.216085	0.278918	0.241097	0.225286	0.228601	0.160823	0.122352	0.179113	0.246755	0.235404	0.238503	0.20831	0.229515	0.173698	0	0.324461	0.247305
9/14/2015 0:00	0.062106	0	0	0	0	2.938866	7.052829	2.209667	0.484919	0.092359	0.144417	0.391797	0.135063	0.167713	0.218612	0.214948	0.146456	0.078727	0.126679	0.166335	0.164644	0.149773	0.205965	0.361951
9/15/2015 0:00	0.24531	0.143913	0.129892	0.294469	0.185276	0.841829	1.997701	1.223329	0.433785	0.136839	0	0	0.146166	0.227044	0	0	0	0	0.053317	0	0	0	0	0.485335
9/16/2015 0:00	0.293495	0.184433	0	0	0	0.432631	0.813932	0	0	0	0	0.086684	0.024988	0.302827	0.245676	0.146461	0.293537	0.273501	0.114944	0.029076	0.103496	0.169738	0.11094	0.064426
9/17/2015 0:00	0.103464	0.070818	0.802498	0	0	0.017752	-0.04574	0.029322	0.195513	0.054982	0.102759	0.020314	0.087018	0.070662	0.054718	0.016372	0.110826	0.684664	0.932943	0.593444	0.505696	0	0.079116	0.146726
9/18/2015 0:00	0.410059	0.951859	0.788607	2.333358	2.17835	0	0	0	0	0	0	0	0	0	0	0	0	0	0	0.429412	0.515833	0.523572	0.558765	0.296891
9/19/2015 0:00	0.08719	0.496158	0.522257	1.503627	0.683013	0.434331	0.988463	0	0	0	0	0	0.411808	0.731903	0.841639	0.886559	0.765688	0.624686	0.609625	0.590389	0.804947	1.180844	1.02351	0.894722
9/20/2015 0:00	0.863513	0.704146	0.449105	0.176388	0.425425	0.482403	0.194083	0.628935	1.139792	1.097096	1.235762	6.660351	5.375838	1.713824	1.126648	0.839109	0.490647	0.490683	0.41672	0.311758	0.177964	0	0.172465	0.185821
9/21/2015 0:00	0.24183	0.311856	0.183432	0.274199	0.166206	0.099484	0.155377	0.11125	0.09434	0.081311	0.105247	0.094537	0.133298	0.148738	0.109562	0.094705	0.457373	0.59022	0.413876	0.227196	0.517981	0.984763	0.472318	0.233773
9/22/2015 0:00	0.112066	0.335922	0.367227	0.303723	0.29298	0.374269	0.226892	0.24133	0.644456	0.952847	1.116836	0.852086	0.57022	0.668039	0.538349	0.479185	0.992421	0.909272	0.186538	0.115163	0.074389	0	0.073289	0.021508
9/23/2015 0:00	0.005959	0.225541	1.720357	0.581388	0.179837	1.253735	1.996412	2.870654	1.179076	0	0	0.062461	0.064722	0.062705	0.109018	0.125651	0.344996	0.060197	0.019434	0.053524	0.073344	0.113331	0.101203	0.316302
9/24/2015 0:00	0.282782	0	0	1.127201	1.410526	2.754493	3.529259	1.746569	1.505054	0	0	0.08512	0.420178	0.907606	0.27623	0.443892	0.304165	0.230969	0.260492	0.591976	0.978074	0	0.238359	0.266178
9/25/2015 0:00	0.307028	0.246754	0.159029	0.102936	0.196971	0.17307	0.162125	1.943984	3.513719	2.121273	3.336455	0.762125	0.763196	0.680197	0.607145	0.540537	0.48947	0.390796	0.37435	0.272766	0.260633	0.7894	3.255436	5.763345
9/26/2015 0:00	2.345938	1.504494	1.15084	0.532924	0	1.77703	1.098639	0.814036	0.560189	0	0.029857	0.665573	0.339563	0.18611	0.183429	0.274342	0.424434	1.23485	0.712175	0.345411	0.12998	0.152257	0.146285	0.117663
9/27/2015 0:00	0.052692	0	-0.01968	0.066033	0.475181	0.42095	0.327586	0.197137	0.091807	0.013581	-0.03035	0.004004	0.025523	0.097127	0.066229	0.016141	-0.00584	0.214949	0.660505	0.400334	0.153713	0	0.004054	-0.01065
9/28/2015 0:00	-0.01711	0.013345	0.064514	-0.02072	0.030905	0.028108	0.063823	0.066645	0.003944	-0.01517	-0.00984	0.241186	0.433604	0.577406	0.804632	0.271835	0.074696	-0.01025	0.049494	0.074671	0.074503	0.040093	0	0.510181
9/29/2015 0:00	0.557369	0.297797	0.086114	-0.05077	0	0	0.355275	0.420887	0.567791	0.526623	0.312346	0.192765	0.096033	0.133152	0.061316	0.02334	0.026182	0.071449	0.135679	0.105098	0.038132	0	0.077987	0.064204
9/30/2015 0:00	0.086411	0.098342	0.147597	0.147247	0.189334	0.203658	0.162587	0.161267	0.185231	0.215895	0.204402	0.119002	0.045253	0.071299	0.041955	0.025815	0.028457	0.02001	0.024126	0.075659	0.061471	0.018579	0.052886	0.065277
10/1/2015 0:00	0.076678	0.059948	0.041867	0.093634	0.068242	0.078971	0.086905	0.05934	0.122229	0.109558	0.087219	0	0	0.056698	0.071305	0.091726	0.088781	0.053164	0.102027	0.066327	0.056899	0	0.060652	0.05748
10/2/2015 0:00	0.046678	0.018622	0.021038	0.048918	0.05381	0.028193	0.050408	0.044281	0.063844	0.088218	0.059997	0.077346	0.065564	0.03237	0.054335	0.045921	0.036025	0.034668	0.051899	0.0502	0.055909	0.036568	0.017971	0.029577
10/3/2015 0:00	0.017307	0.040323	0.011686	0.037483	0.039398	0.029381	0.065043	0.045805	0.035876	0.044624	0.066243	0.022391	0.06986	0.038733	0.027961	0.046574	0.026924	0.034636	-0.0067	0.02732	0.058316	0.058665	0.012492	0.016251
10/4/2015 0:00	0.062844	0.052091	0.042684	0.042685	0.032781	0.053964	0.055622	0.067624	0.090928	0.083725	0.066821	0.105432	0.062915	0.098191	0.047584	0.024849	0.043362	0.020113	0.020002	0.058308	0.06839	0	0.071661	0.06628
10/5/2015 0:00	0.086732	0.059544	0.077328	0.052153	0.065597	0.040684	0.088769	0.128972	0.119157	0.082447	0.14736	0.198673	0.092659	0.09601	0.103783	0.083307	0.02185	0.094087	0.09124	0.093528	0.06908	0.079718	0	0.146879
10/6/2015 0:00	0.165706	0.150121	0.196678	0.110931	0.095259	0.070035	0.078144	0.081823	0.049641	0.03315	0.024589	0.015505	0.03254	0.017351	0.046315	0.026356	0.036902	0.005029	0.02626	0.055873	0.119189	0	0.070462	0.003062

Centrevill, AL SEARCH Monitor - 2015 Hourly SO2 Data (ppb)

10/7/2015 0:00	0.008151	-0.00163	0.02195	0	-0.01365	0.034975	0.044461	-0.00095	0.031859	0.105853	0.321871	0.188432	0.12608	0.1161	0.085699	0.04768	0.083141	0.10614	0.034074	0.124799	0.045498	0.110496	0.131998	0.201324
10/8/2015 0:00	0.104096	0.059131	0.028707	0.055198	0.03867	0.038028	0.099314	0.305497	0.384872	0	0.283864	0.328914	0.46435	0.491601	0.547553	0.512311	0.396301	0.318952	0.482113	0.571657	0.50567	0	0.502493	0.316329
10/9/2015 0:00	0.3124	0.156861	0.114437	0.107494	0.182578	0.103731	0.092898	0.087292	0.13699	0.283135	2.091643	9.225752	0	8.433812	7.971401	2.428163	0.357688	0.344868	0.376468	0.375274	0.597567	0.291108	0.11319	0.048922
10/10/2015 0:00	0.091953	0.091836	0.034258	0.032445	0.034315	-0.02448	0.005934	0.024253	0.039224	0.076891	0.013854	0.013982	0.007205	-0.02592	0.003123	-0.00806	-0.00808	0.029964	0.082664	0.065187	0.022817	0.024364	-0.00232	0.024554
10/11/2015 0:00	0.037016	0.004219	0.067907	0.058458	0.038584	0.046408	0.039466	0.037089	0.005534	0.03083	0.065909	0.03582	0.03152	0.039024	0.020354	0.013675	0.049585	0.02592	0.064387	0.218578	0.145054	0	0.138024	0.03128
10/12/2015 0:00	0.034929	0.043548	-0.006	-0.00143	0.146004	0.050504	0.063094	0.116403	0.200573	0.580752	0.503593	0.377156	0.358329	0.386023	0.413634	0.399407	0.366267	0.354005	0.24719	0.250642	0.226354	0.251271	0.302743	0.106178
10/13/2015 0:00	0.143948	0.184637	0.136319	0.106544	0.104556	0.126599	0.123399	0.137939	0.21271	0.486635	1.267444	0.759475	0.412304	0.195906	0.191381	0.238095	0.208451	0.121498	0.107575	0.116592	0.172583	0	0.067802	0.054828
10/14/2015 0:00	0.144615	0.147077	0.120533	0.151973	0.1421	0.046901	0.028905	0.051462	0.050345	0.114999	0.286799	0.335359	0.242542	0.261129	0.336143	0.367685	0.283235	0.287111	0.3165	0.317089	0.363593	0.251656	0.230673	0.159345
10/15/2015 0:00	0.085572	0.048679	0.042516	0.095938	0.408756	0	0	0	0	0	0	0	0	0	0	0	0	0	0	0	0	0	0	0
10/16/2015 0:00	0	0	0	0	0	0	0	0	0	0	0	0	0	0	0	0	0	0	0	0	0	0	0	0
10/17/2015 0:00	0	0	0	0	0	0	0	0	0	0	0	0	0	0	0	0	0	0	0	0	0	0	0	0
10/18/2015 0:00	0	0	0	0	0	0	0	0	0	0	0	0	0	0	0	0	0	0	0	0	0	0	0	0
10/19/2015 0:00	0	0	0	0	0	0	0	0	0	0	0	0	0	0	0	0	0	0	0	0	0	0	0	0
10/20/2015 0:00	0.128945	0.127605	0.174656	0.108656	0.075502	0.116157	0.132782	0.344865	0.237952	0.138229	0.153544	0.161546	0.135118	0.256605	0.217431	0.174553	0.271386	0.230357	0.297765	0.473142	0.285799	0	0.186546	0.180919
10/21/2015 0:00	0.160226	0.141658	0.140611	0.062498	0.024028	0	0	0.757651	0.65054	-0.01794	0	0	0	-0.02054	0.006292	0.042995	0.077904	0.062576	0.009197	0.012739	-0.01304	0.015359	-0.04075	0
10/22/2015 0:00	-0.01844	0.790928	0.480554	0.101026	0.142289	0.151077	0.050599	0	0	0	0	0	0	0	0	0.036566	-0.0226	0.060672	0.061633	0.070789	-0.01295	0	-0.01517	-0.04134
10/23/2015 0:00	0.004225	0	0	0.503895	0.23289	0	0	0.259186	0.034963	0	0	0	-0.03609	0.002217	0.002262	-0.01898	0.043613	0.04046	0.059526	0.070241	0.077428	0.049869	0.044415	0.037628
10/24/2015 0:00	0.047099	0.035863	0.074917	0.044802	0.040759	0.071984	0.096149	0.169609	0.134918	0.112631	0.096135	0.076875	0.093113	0.109545	0.144599	0.126928	0.041486	0.033016	0.019739	0.037923	0.006656	0.05271	0.068259	0.094339
10/25/2015 0:00	0.115886	0.047928	-0.00259	0.014898	0.125578	0.055437	0.022736	0.084162	0.119233	0.166634	0.095495	0.040611	0.039804	0.038819	-0.02623	0.061238	0.341719	0.481795	0.2078	0.068414	0.371291	0	0	0.021487
10/26/2015 0:00	0.001325	0.085673	0.388617	0.140703	0.058215	-0.00732	0.024653	0.047004	0.022463	0.095216	0.054119	0.012416	0.049115	0.042696	-0.02815	0.013997	0.062405	0.077561	0.084477	0.083596	0.103425	0.078898	0.166398	0.059467
10/27/2015 0:00	0.085372	0.06481	0.045334	0.064521	0.104979	0.077786	0.08542	0.077447	0.115389	0.108385	0	0.146329	0.151043	0.105898	0.098555	0	0.084681	0.085326	0.087856	0.074072	0.057024	0	0.05889	0.028067
10/28/2015 0:00	0.02862	0.012568	0.02227	0	0	0.025989	0.029831	0.049608	0.021113	0.060217	0.013873	0.019064	0.025115	0.026777	0.027373	0.044299	0.034056	0.061997	0.052781	0.116074	0.242537	0.161491	0.141457	0.095323
10/29/2015 0:00	0.038043	0.096103	0.094772	0.121958	0.106146	0.127706	0.097061	0.112651	0.128974	0.13731	0.097057	0.144766	0.129515	0.093024	0.068086	0.097364	0.145667	0.124203	0.092449	-0.02563	0.009756	0	0.052692	0.090638
10/30/2015 0:00	0.085534	0.042727	0.046889	0.037684	0.024348	0.062039	0.006659	0	1.375311	3.607576	2.617378	1.757967	1.168638	0.641293	0.511166	0.403965	0.279504	0.321689	0.310074	0.079031	0	0.560035	0.780366	0.197747
10/31/2015 0:00	0.189839	0.032794	0.023236	0.080286	0.053066	0.101795	0.150075	0.205454	0.253565	0.185011	0.206565	0.187035	0.15611	0.174781	0.142228	0.178875	0.126164	0.068914	0.062841	0.007469	0.028657	-0.00371	-0.02831	0.008263
11/1/2015 0:00	0.016684	0.043592	0.033686	0.082541	0.057644	0.049407	0.042207	0.026925	0.047529	0.054721	0.05808	0.174614	0.296604	-0.01969	0.014445	0.064055	-0.05264	0.461675	0.45914	0	0	0	0.049812	0.086478
11/2/2015 0:00	0.218872	0.00554	0	0.00851	0.07748	0.137543	0.248424	0.158157	-0.02724	0.099898	0.016002	-0.03023	-0.00429	0.115274	0.052141	0.030307	0.01788	0.003504	0.014378	0.018667	-0.03542	-0.0393	0.00037	-0.03108
11/3/2015 0:00	0	0.044787	0.002839	0.049304	0.021999	-0.0295	0.000941	0.01504	0.097676	0.121237	0.152905	0.064303	0.046215	0.0112	0.012673	0.012184	-0.03908	-0.03556	-0.05801	-0.04925	-0.00463	0	0	0.256205
11/4/2015 0:00	0.15635	-0.03084	-0.00145	-0.0238	0	0.051506	0.026868	-0.00341	0.007932	-0.03043	0.008274	0.0895	0.049463	0.049849	0.047382	0.107712	0.106842	0.081396	0.103364	0.108542	0.104743	0.10719	0.066746	0.05412
11/5/2015 0:00	0.04442	0.021257	0.036197	0.024805	0.032451	0.061928	0.043348	0.091749	0.064169	0.086817	0.076702	0.093134	0.069632	0.07431	0.049387	0.039267	0.033152	0.016619	0.030698	0.031992	0.032719	0	0.061871	0.075217
11/6/2015 0:00	0.094255	0.112505	0.080881	0.02461	0.052155	0.052609	0.057407	0.084563	0.094388	0.100362	0.082125	0.101575	0.108749	0.103011	0.117343	0.10799	0.075293	0.038756	0.045913	0.02852	0.0543	0.026089	0.039824	0.048964
11/7/2015 0:00	0.060562	0.071785	0.019164	0.084526	0.039669	0.051485	0.074597	0.082164	0.076787	0.036709	0.059031	0.083041	0.101088	0.099821	0.110583	0.051354	0.087563	0.082928	0.088061	0.10519	0.091264	0.082663	0.066372	0.065383
11/8/2015 0:00	0.068639	0.046275	0.0531	0.281187	0.255781	0.116411	0.108574	0.216401	0.382616	0.303246	0.392081	0.354014	0.213501	0.279876	0.284374	0.183573	0.122166	0.111673	0.076834	0.153278	0.127567	0	0.188329	0.213088
11/9/2015 0:00	0.216778	0.222046	0.214316	0.132001	0.127771	0.117207	0.106139	0.092472	0.089986	0.056741	0.081318	0.116184	0.118337	0.146524	0.116132	0.154329	0.133976	0.08765	0.092383	0.106453	0.085803	0.100698	0.110422	0.077462
11/10/2015 0:00	0.06503	0.070028	0.064957	0.069036	0.06946	0.059281	0.082317	0.100718	0.058951	0.074301	0.070764	0.060079	0.063319	0.07818	0.070572	0.079408	0.090568	0.058998	0.07648	0.030822	0.034529	0	0.068426	0.11551
11/11/2015 0:00	0.088722	0.046329	0.083993	0.032701	0.099165	0.073875	0.052859	0.079737	0.046266	0.072594	0.073524	0.082589	0.084129	0.09958	0.124026	0.197639	0.145735	0.1127	0.091015	0.122943	0.104676	0.098463	0.095897	0.078158
11/12/2015 0:00	0.075848	0.08751	0.085845	0.070965	0.057409	0.039948	0.006785	0.003354	0.017137	0.050491	0.03506	0.098524	0.105683	0.134377	0.180112	0.133689	0.120642	0.103685	0.052448	0.215874	0.274005	0	0.099212	0.049958
11/13/2015 0:00	0.036052	0.004911	0.027171	0.023829	0.058723	0.072326	0.069611	0.14815	0.218436	0.29958	0.192654	0.184848	0.22066	0.237759	0.230069	0.222027	0.203678	0.17527	0.191866	0.163575	0.153225	0.257941	0.219956	0.118533
11/14/2015 0:00	0.114499	0.13035	0.232788	0.304935	0.292399	0.197322	0.305527	0.782199	0.784533	0.311156	0.385443	0.186384	0.256014	0.280752	0.315472	0.36188	0.407621	0.352194	0.348975	0.267754	0.30746	0.200404	0.303817	0.586894
11/15/2015 0:00	0.253783	0.054045	0.435324	0.535792	0	0.57113	0.174453	0.687741	1.657646	0.737531	0.539636	0.277453	0.308599	0.330818	0.27003	0.232467	0.251591	0.32671	0.284561	0.30576	0.245192	0	0.178745	0.176448
11/16/2015 0:00	0.129757	0.107264	0.075079	0.006998	0.114282	0.228453	0.182186	0.109668	0.1989	0.198359	0.210418	0.245901	0.22124	0.315052	0.261409	0.17897	0.127143	0.078995	0.072292	0.145692	0.118098	0.109013	0.171851	0.078711
11/17/2015 0:00	0.111831	0.137741	0.12137	0.137571	0.112873	0.102336	0.107237	0.172423	0.143263	0.107608	0	0	0	0.053657	0.118135	0.119627	0.093028	0.034541	0.065899	0.051312	0.13755	0	0.09645	0.081202
11/18/2015 0:00	0.091087	0.064748	0.089804	0.037014	0.091159	0.063837	0.123433	0.126817	0.094953	0.110344	0.100649	0.101213	0.047644	0.046943	0.036793	0.056636	0.022365	0.031423	0.027697	0.040328	0.024549	0.032459	0.073871	0.090531
11/19/2015 0:00	0.103612	0.098779	0.102788	0.145734	0.091286	0.084356	0.071169	0.079402	0.135091	0.166716	0	0	0.150772	0.115664	0.082945	0.099641	0.086893	0.045323	0.058914	0.02681	0.011973	0	0.06182	0.055807
11/20/2015 0:00	0.045594	0.002437	0.030293	0.067784	0.084762	0.05631	0.020019	0.030486	0.06011	0.074718	0.023333	0.042585	0.084919	-0.0088	-0.03991	-0.00386	-0.00324	0.016828	0.000122	0.000534	0.048414	0.097345	0.08036	3.302934
11/21/2015 0:00	3.298837	0.571243	0.249415	0.234378	0.395886	0.144204	0.077356	0.005987	0.108901	0.062874	-0.01279	0.071021	0.084153	0.092038	0.062953	0.051585	0.038571	0.071041	0.028037	0.069826	0.058678	0.109105	0.094059	0.054385
11/22/2015 0:00	0	0.024515	0.115813	0.131178	0.048312	0.008244	0.019107	0.067751	0.050078	0.004887	0.02891	0.079283	0.048125	0.081491	0.082969	0.06056	0	0	0.217444	0.052044	0.107894	0	0.154092	0.062909
11/23/2015 0:00	0.035246	0.005609	0.028524	0.07165	0.082037	0.027502	0.012826	0.105631	0.67193	0.679869	0.495681	0.167697	0	0.143477	0.344571	0.582273	0.67425	1.161441	1.318181	1.421113	1.424745	0.932914	0.377518	0.33092
11/24/2015 0:00	0.198991	0	0	0.183234	0	0	0	0	0.594068	1.238586	0.518292	0.29589	0.3708	0.459974	0.342015	0.258392	1.118703	1.597525	0.438686	0.320424	0.38132	0	0.198152	0.249541
11/25/2015 0:00	0.308431	0.127039	0.148719	0.117966	0.067571	0.089415	0.163304	0.313444	0.334197	0	0.257027	0	0.245942	0.25293	0.352771	0.361264	0.242783	0.11682	0.085374	0.05364	0.093554	0.136888	0.203549	0.139956
11/26/2015 0:00	0.073397	0.069915	0.057039	0.052162	0.051941	-0.00476	-0.0114	0.026189	0.079533	0.021023	0.048564	0.064823	0.073671	0.095345	0.104715	0.098871	0.09945	0.055209	0.071092	0.055379	0.060312	0	0.118042	0.074782
11/27/2015 0:00	0.100443	0.10336	0.072389	0.063421	0.029711	0.036523	0.038542	0.033995	0.043914	0.012382	-0.00874	0.010182	-0.00211	0.041593	0.075087	0.030164	0.006448	0.014566	-0.01098	0.015047	0.024493	0.066431	0.076749	0.08689
11/28/2015 0:00	0.102521	0.064634	0.062833	0.044097	0.081372	0.075251	0.08618	0.087127	0.083955	0.036523	0.029052	0.036057	0.017835	0.035461	0.098186	0.092125	0.068813	0.058388	0.085789	0.112379	0.080722	0.064751	0.028136	0.0177
11/29/2015 0:00	0.030977	0.006617	0.021356	0.025209	0.041008	0.056646	0.059879	0.051701	0.023954	0.050955	0.04122	0.023766	0.016282	0.046503	0.018267	0.017004	0.032214	0.025364	0.033568	0.014286	0.079005	0	0.090181	0.037613
11/30/2015 0:00	0.018822	0.048936	0.032032	0.077317	0.065907	0.081592	0.1007	0.100273	0.094437	0.124344	0.096537	0.058503	0.039103	0.021639	-0.00509	0.032309	0.0313	-0.00699	0.045162	0.04341	0.016368	0.069063	0.072942	0.070389
2nd Highest =	**2.35**	**0.95**	**1.15**	**1.50**	**1.41**	**2.75**	**3.53**	**2.21**	**1.76**	**2.12**	**2.62**	**6.66**	**1.17**	**1.71**	**1.59**	**1.64**	**1.12**	**1.23**	**1.02**	**0.60**	**1.37**	**0.98**	**1.02**	**3.30**

Centrevill, AL SEARCH Monitor - 2013-2015 Hourly SO2 Data Summary (ppb)
Second Highest Concentrations by Season and Hour-of-Day

		12:00:00 AM	1:00:00 AM	2:00:00 AM	3:00:00 AM	4:00:00 AM	5:00:00 AM	6:00:00 AM	7:00:00 AM	8:00:00 AM	9:00:00 AM	10:00:00 AM	11:00:00 AM	12:00:00 PM	1:00:00 PM	2:00:00 PM	3:00:00 PM	4:00:00 PM	5:00:00 PM	6:00:00 PM	7:00:00 PM	8:00:00 PM	9:00:00 PM	10:00:00 PM	11:00:00 PM
2013	Wrinter	3.08	3.13	2.15	1.97	4.25	3.81	2.38	6.90	7.34	2.64	3.50	3.93	3.31	2.96	3.87	3.85	2.16	3.34	5.03	3.52	3.64	4.97	5.23	3.41
	Spring	2.65	2.40	2.55	2.32	2.18	1.80	1.48	2.01	2.96	3.82	4.50	3.55	2.51	3.96	2.61	2.85	3.87	3.00	1.88	1.27	1.21	1.88	4.09	4.15
	Summer	0.86	1.01	0.96	1.84	1.90	1.36	1.76	3.97	5.37	3.26	1.72	2.38	2.30	4.74	2.46	0.95	1.44	0.89	0.96	1.21	1.30	0.49	0.97	0.72
	Fall	1.71	1.68	2.12	1.91	3.15	1.82	1.49	2.67	3.52	6.25	3.34	3.64	2.24	2.56	1.74	1.37	1.52	1.48	1.32	1.19	0.98	1.17	1.22	2.52
2014	Winter	3.13	6.03	4.38	4.01	4.28	9.82	15.86	10.18	7.82	5.59	6.57	7.76	4.30	3.14	3.34	4.29	7.16	3.18	3.24	2.27	2.14	2.36	2.03	2.65
	Spring	2.19	2.42	1.97	1.95	1.57	1.56	1.84	2.70	8.39	4.86	2.23	1.92	2.43	3.90	5.75	4.01	3.25	4.23	3.41	3.48	4.17	1.67	1.85	2.03
	Summer	1.87	4.40	5.43	3.78	2.52	6.27	13.14	16.07	13.02	7.34	11.12	2.80	2.05	1.51	2.41	1.75	1.71	2.04	2.27	2.73	3.62	1.60	1.13	1.01
	Fall	1.84	2.36	3.13	7.48	14.78	20.08	19.94	21.36	20.80	10.28	6.50	3.49	3.61	1.49	2.04	3.13	1.39	1.19	1.27	1.33	2.71	2.81	4.04	3.48
2015	Winter	4.46	2.46	2.65	1.84	1.40	1.50	1.88	5.48	5.25	4.08	3.40	5.14	5.56	5.69	4.80	3.59	2.88	3.99	4.19	4.55	12.19	1.30	5.44	7.57
	Spring	2.36	1.19	1.14	1.07	2.00	2.26	2.53	3.25	2.45	2.39	2.76	1.33	1.76	1.40	1.88	2.64	1.73	1.67	1.71	2.58	1.87	1.20	1.43	2.07
	Summer	2.24	2.17	1.93	2.48	1.61	2.22	2.88	2.98	3.91	1.37	2.65	3.53	5.54	3.16	3.56	3.19	2.72	5.78	4.00	2.88	2.22	1.39	1.92	1.88
	Fall	2.35	0.95	1.15	1.50	1.41	2.75	3.53	2.21	1.76	2.12	2.62	6.66	1.17	1.71	1.59	1.64	1.12	1.23	1.02	0.60	1.37	0.98	1.02	3.30

3-Year Average Second Highest Concentrations by Season and Hour-of-Day

3-Year Avg.	Wrinter	3.56	3.87	3.06	2.61	3.31	5.04	6.71	7.52	6.80	4.10	4.49	5.61	4.39	3.93	4.00	3.91	4.06	3.50	4.15	3.45	5.99	2.88	4.23	4.54	3.56
	Spring	2.40	2.00	1.89	1.78	1.92	1.87	1.95	2.65	4.60	3.69	3.16	2.27	2.23	3.08	3.41	3.16	2.95	2.97	2.33	2.45	2.42	1.58	2.46	2.75	2.40
	Summer	1.66	2.53	2.77	2.70	2.01	3.28	5.93	7.67	7.43	3.99	5.17	2.90	3.30	3.13	2.81	1.96	1.96	2.90	2.41	2.27	2.38	1.16	1.34	1.20	1.66
	Fall	1.96	1.66	2.13	3.63	6.45	8.22	8.32	8.75	8.69	6.22	4.15	4.60	2.34	1.92	1.79	2.05	1.34	1.30	1.20	1.04	1.69	1.65	2.09	3.10	1.96

For Model Input

	1:00:00 AM	2:00:00 AM	3:00:00 AM	4:00:00 AM	5:00:00 AM	6:00:00 AM	7:00:00 AM	8:00:00 AM	9:00:00 AM	10:00:00 AM	11:00:00 AM	12:00:00 PM	1:00:00 PM	2:00:00 PM	3:00:00 PM	4:00:00 PM	5:00:00 PM	6:00:00 PM	7:00:00 PM	8:00:00 PM	9:00:00 PM	10:00:00 PM	11:00:00 PM	12:00:00 AM
Winter	3.87	3.06	2.61	3.31	5.04	6.71	7.52	6.80	4.10	4.49	5.61	4.39	3.93	4.00	3.91	4.06	3.50	4.15	3.45	5.99	2.88	4.23	4.54	3.56
Spring	2.00	1.89	1.78	1.92	1.87	1.95	2.65	4.60	3.69	3.16	2.27	2.23	3.08	3.41	3.16	2.95	2.97	2.33	2.45	2.42	1.58	2.46	2.75	2.40
Summer	2.53	2.77	2.70	2.01	3.28	5.93	7.67	7.43	3.99	5.17	2.90	3.30	3.13	2.81	1.96	1.96	2.90	2.41	2.27	2.38	1.16	1.34	1.20	1.66
Fall	1.66	2.13	3.63	6.45	8.22	8.32	8.75	8.69	6.22	4.15	4.60	2.34	1.92	1.79	2.05	1.34	1.30	1.20	1.04	1.69	1.65	2.09	3.10	1.96

APPENDIX D

OPERATING PERMITS

From:	Sheen, Maria
To:	Mohammad, Sal
Subject:	FW: Modeling Project - Request Information
Date:	Wednesday, November 02, 2016 4:06:18 PM
Attachments:	image001.png modeling.csv

fyi

From: Himes, Brian [mailto:Brian.Himes@dep.state.fl.us]
Sent: Wednesday, November 02, 2016 3:01 PM
To: Sheen, Maria <Maria_Sheen@golder.com>
Subject: RE: Modeling Project - Request Information

Maria,

I've attached the inventory report for Breitburn Operating for all units and all criteria pollutants. Per usual, this data is considered preliminary and a good starting point for modeling. All final parameters and emission rates should be verified through facility permits and other documentation. Please let me know if you have any questions.

Thanks,

- Brian

BRIAN HIMES
ENVIRONMENTAL CONSULTANT
Division of Air Resource Management
Florida Department of Environmental Protection
2600 Blair Stone Road, MS 5500
Tallahassee, FL 32399
Office: (850) 717-9005
Brian.Himes@dep.state.fl.us

From: Sheen, Maria [mailto:Maria_Sheen@golder.com]
Sent: Wednesday, November 02, 2016 2:34 PM
To: Himes, Brian <Brian.Himes@dep.state.fl.us>
Subject: Modeling Project - Request Information

Good Afternoon Brian,

I am working on a modeling project with Sal Mohammad and I need source information for the following facility. I know the Querry reports have the pollutant and stack details. Please see if you can send me the information.

Owner/Company Name: BREITBURN OPERATING LP

Facility ID: 1130005

Thanks in advance,

Maria de Lourdes Sheen | Project Engineer | **Golder Associates Inc.**
6026 NW 1st Place Road, Gainesville, Florida, USA 32607
T: +1 (352) 336-5600 | **F:** +1 (352) 336-6603 | **E:** Maria_Sheen@golder.com | **www.golder.com**

Work Safe, Home Safe

This email transmission is confidential and may contain proprietary information for the exclusive use of the intended recipient. Any use, distribution or copying of this transmission, other than by the intended recipient, is strictly prohibited. If you are not the intended recipient, please notify the sender and delete all copies. Electronic media is susceptible to unauthorized modification, deterioration, and incompatibility. Accordingly, the electronic media version of any work product may not be relied upon.

Golder, Golder Associates and the GA globe design are trademarks of Golder Associates Corporation.

Please consider the environment before printing this email.

Facility ID	Owner / Company Name	Site Name	UTM Zone	UTM East(I	UTM North	Lat DD	Lat MM	Lat SS	Long DD	Long MM	Long SS	EU ID
1130005	BREITBURN OPERATING LP	ST REGIS GAS TREATING FACILITY	16	482.8	3425.6	30	52	45	87	10	45	34
1130005	BREITBURN OPERATING LP	ST REGIS GAS TREATING FACILITY	16	482.8	3425.6	30	52	45	87	10	45	35
1130005	BREITBURN OPERATING LP	ST REGIS GAS TREATING FACILITY	16	482.8	3425.6	30	52	45	87	10	45	36
1130005	BREITBURN OPERATING LP	ST REGIS GAS TREATING FACILITY	16	482.8	3425.6	30	52	45	87	10	45	37
1130005	BREITBURN OPERATING LP	ST REGIS GAS TREATING FACILITY	16	482.8	3425.6	30	52	45	87	10	45	38
1130005	BREITBURN OPERATING LP	ST REGIS GAS TREATING FACILITY	16	482.8	3425.6	30	52	45	87	10	45	39
1130005	BREITBURN OPERATING LP	ST REGIS GAS TREATING FACILITY	16	482.8	3425.6	30	52	45	87	10	45	40
1130005	BREITBURN OPERATING LP	ST REGIS GAS TREATING FACILITY	16	482.8	3425.6	30	52	45	87	10	45	41
1130005	BREITBURN OPERATING LP	ST REGIS GAS TREATING FACILITY	16	482.8	3425.6	30	52	45	87	10	45	42
1130005	BREITBURN OPERATING LP	ST REGIS GAS TREATING FACILITY	16	482.8	3425.6	30	52	45	87	10	45	43
1130005	BREITBURN OPERATING LP	ST REGIS GAS TREATING FACILITY	16	482.8	3425.6	30	52	45	87	10	45	44
1130005	BREITBURN OPERATING LP	ST REGIS GAS TREATING FACILITY	16	482.8	3425.6	30	52	45	87	10	45	45
1130005	BREITBURN OPERATING LP	ST REGIS GAS TREATING FACILITY	16	482.8	3425.6	30	52	45	87	10	45	46
1130005	BREITBURN OPERATING LP	ST REGIS GAS TREATING FACILITY	16	482.8	3425.6	30	52	45	87	10	45	50
1130005	BREITBURN OPERATING LP	ST REGIS GAS TREATING FACILITY	16	482.8	3425.6	30	52	45	87	10	45	53

EU Description	EU Status	Stack Heig	Diam(ft)	Exit Temp(	ACFM	VEL(ft/s)	Pollutant	Pollutant D	Potential(l	Potential(t	Allowable(	Allowable(	Comments	Actual(tpy)	Year
Sulfur Recovery Plants J2 and J3	ACTIVE	250	3	900			SO2	Sulfur Diox	2001	2490	2001	2490	lbs SO2 pe	1424.73	2015
Flares FL01 and FL02	ACTIVE	117	3	1832			SO2	Sulfur Diox	0.02	730		730	Excess emi	20.49	2015
Four 1200 HP JCSWD Saturn NG firec	INACTIVE	35	2.5	800	6465	22	SO2	Sulfur Dioxide					fuel sampli	0	2010
JCSWD 3600 HP NG fired Solar Centa	ACTIVE	35	2.5	800	17333	58.9	SO2	Sulfur Diox	0.15	0.64			fuel sampli	0.26	2015
1000 HP Ingersol Rand Compressor e	ACTIVE	30	1	1059	3726	79.1	SO2	Sulfur Diox	0.007	0.03				0.022	2015
Sulfur Storage Pits Jay 2 and Jay 3 an	ACTIVE	23	1	271			SO2	Sulfur Diox	1.4	5.94				5.95	2015
Jay 2 and Jay 3 Process Heaters - 56.	ACTIVE	60	4	340	14557	19.3	SO2	Sulfur Diox	0.07	0.3				0.29	2015
Jay 2 and Jay 3 stabilizer bottom hea	ACTIVE	60	3	700	10552	24.9	SO2	Sulfur Diox	0.03	0.14				0.073	2015
Jay Plant Hot Oil Heater	ACTIVE	60	2	630	19438	103.1	SO2	Sulfur Diox	0.03	0.14				0.144	2015
NG fired 14,300 HP Water Flood Turl	ACTIVE	30	12.5	950	78382	10.6	SO2	Sulfur Diox	0.53	2.32				1.76	2015
5 - 1,000 HP NG Ingersol Rand Comp	ACTIVE	30	1	1059	3726	79.1	SO2	Sulfur Diox	0.03	0.1				0.056	2015
One 5000 HP NG fired Cooper Besser	ACTIVE	22	3	950	56200	132.5	SO2	Sulfur Diox	0.025	0.11				0.105	2015
One 2,500 HP NG fired Cooper-Besse	INACTIVE	22	3	750	8113	19.1	SO2	Sulfur Dioxide						0	2014
14,300-Hp South Water Flood Gas Tu	ACTIVE	30	12.5	950	78382	10.6	SO2	Sulfur Diox	0.51	1.03				0.44	2015
Emergency RICE engines	ACTIVE	10	1				SO2	Sulfur Dioxide						0.0053	2015

Lance R. LeFleur
Director

Robert J. Bentley
Governor

Alabama Department of Environmental Management
adem.alabama.gov

1400 Coliseum Blvd. 36110-2400 ■ Post Office Box 301463
Montgomery, Alabama 36130-1463
(334) 271-7700 ■ FAX (334) 271-7950

February 1, 2016

Min Wang
Sr. Environmental Engineer
Vanguard Natural Resources, LLC
5847 San Felipe, Suite 3000
Houston, TX 77057

RE: **Synthetic Minor Operating Permit (SMOP)**
Escambia Operating Company, LLC
Gallagher 16-3 No. 1 Oil & Gas Production Facility
Facility No.: 502-0042
Permit No.: X003

Dear Dr. Wang:

The enclosed Synthetic Minor Operating Permit is issued pursuant to the Department's air pollution control rules and regulations. SMOP No. 502-0042-X003 will replace Major Source Operating Permit No. 502-0042 that was issued on September 28, 2010. Please note the conditions that must be observed in order to retain this permit.

If you have any questions or require clarification of permit conditions, please e-mail or call Jennifer Youngpeter at (334) 270-5676 or jennifer.youngpeter@adem.state.al.us in Montgomery.

Sincerely,

Ronald W. Gore, Chief
Air Division

RWG/jsy

Birmingham Branch
110 Vulcan Road
Birmingham, AL 35209-4702
(205) 942-6168
(205) 941-1603 (FAX)

Decatur Branch
2715 Sandlin Road, S.W.
Decatur, AL 35603-1333
(256) 353-1713
(256) 340-9359 (FAX)

Mobile Branch
2204 Perimeter Road
Mobile, AL 36615-1131
(251) 450-3400
(251) 479-2593 (FAX)

Mobile-Coastal
3664 Dauphin Street, Suite B
Mobile, AL 36608
(251) 304-1176
(251) 304-1189 (FAX)

ADEM
Alabama Department of Environmental Management

SYNTHETIC MINOR OPERATING PERMIT

PERMITTEE: Escambia Operating Company, LLC

FACILITY: Gallagher 16-3 No. 1 Oil & Gas Production Facility

LOCATION: Section 16, T3N-R9E, Flomaton, Escambia County, Alabama

PERMIT NUMBER	DESCRIPTION OF EQUIPMENT, ARTICLE OR DEVICE
502-0042-X003	**Oil & Gas Production Facility**
Emission Points	
FLARE-01	Sour Gas Flare

In accordance with and subject to the provisions of the Alabama Air Pollution Control Act of 1971, as amended, Ala. Code §§22-28-1 to 22-28-23 (2006 Rplc. Vol. and 2007 Cum. Supp.) (the "AAPCA") and the Alabama Environmental Management Act, as amended, Ala. Code §§22-22A-1 to 22-22A-15 (2006 Rplc. Vol. and 2007 Cum. Supp.), and rules and regulations adopted there under, and subject further to the conditions set forth in this permit, the Permittee is hereby authorized to construct, install and use the equipment, device or other article described above.

ISSUANCE DATE : **FEBRUARY 1, 2016**

Alabama Department of Environmental Management

1. This permit is issued on the basis of Rules and Regulations existing on the date of issuance. In the event additional Rules and Regulations are adopted, it shall be the permit holder's responsibility to comply with such rules.

2. This permit expires and the application is cancelled if construction has not begun within 24 months of the date of issuance of the permit.

3. This permit is not transferable. Upon sale or legal transfer, the new owner or operator must apply for a permit within 30 days.

4. The issuance of this permit does not convey any property rights of any sort, or any exclusive privilege.

5. The permittee shall not use as a defense in an enforcement action that maintaining compliance with conditions of this permit would have required halting or reducing the permitted activity.

6. Additions and revisions to the conditions of this Permit will be made, if necessary, to ensure that the Department's air pollution control rules and regulations are not violated.

7. Nothing in this permit or conditions thereto shall negate any authority granted to the Department pursuant to the Alabama Environmental Management Act or regulations issued thereunder.

8. A new permit application must be made for new sources, replacements, alterations or design changes which may result in the issuance of, or an increase in the issuance of, air contaminants, or the use of which may eliminate or reduce or control the issuance of air contaminants.

9. On completion of construction of the device for which this permit is issued, notification of the fact is to be given to the Chief of the Air Division. Authorization to operate the unit must be received from the Chief of the Air Division. Failure to notify the Chief of the Air Division of construction and/or operation without authorization could result in revocation of this permit.

10. This process including all air pollution control devices and capture systems for which this permit is issued shall be maintained and operated at all times in a manner so as to minimize the emissions of air contaminants. Procedures for ensuring that the above equipment is properly operated and maintained so as to minimize the emission of air contaminants shall be established.

11. In case of shutdown of air pollution control equipment for scheduled maintenance, the intent to shut down shall be reported to the Air Division at least 24 hours prior to the planned shutdown, **unless accompanied by the immediate shutdown of the emission source.**

12. In the event there is a breakdown of equipment in such a manner as to cause increased emission of air contaminants for a period greater than **24 hours**, the

person responsible for such equipment shall notify the Department within an additional 24 hours and provide a statement giving all pertinent facts, including the duration of the breakdown. The Department shall be notified when the breakdown has been corrected.

13. This permit is issued with the condition that, should obnoxious odors arising from the plant operations be verified by Air Division inspectors, measures to abate the odorous emissions shall be taken upon a determination by the Alabama Department of Environmental Management that these measures are technically and economically feasible.

14. Records will be maintained of the occurrence and duration of any startup, shutdown, or malfunction in the operation of the process equipment and any malfunction of the air pollution control equipment. These records will be kept in a permanent form suitable for inspection and will be retained for at least two years following the date of each occurrence.

15. All deviations from requirements within this permit shall be reported to the Department within 48 hours of the deviation or by the next work day while providing a statement with regards to the date, time, duration, cause and corrective actions taken to bring the sources back into compliance. A review and evaluation of this report shall be utilized in Departmental determination of whether or not a violation of a permit requirement or requirements occurred.

16. Submittal of other reports regarding monitoring records, fuel analyses, operating rates, and equipment malfunctions may be required as authorized in the Department's air pollution control rules and regulations. The Department may require stack emission testing at any time.

17. The Department must be notified in writing at least 10 working days in advance of all emission tests to be conducted and submitted as proof of compliance with the Department's air pollution control rules and regulations. To avoid problems concerning testing methods and procedures, the following shall be included with the notification letter:

    a. The date the test crew is expected to arrive, the date and time anticipated of the start of the first run, how many and which sources are to be tested, and the names of the persons and/or testing company that will conduct the tests.

    b. A complete description of each sampling train to be used, including type of media used in determining gas stream components, type of probe lining, type of filter media, and probe cleaning method and solvent to be used (if test procedure requires probe cleaning).

    c. A description of the process to be tested, including the feed rate, any operating parameter used to control or influence the operations, and the rated capacity.

d. A sketch or sketches showing sampling point locations and their relative positions to the nearest upstream and downstream gas flow disturbances.

e. A pretest meeting may be held at the request of the source owner or the Department. The necessity for such a meeting and the required attendees will be determined on a case-by-case basis.

f. All test reports must be submitted to the Department within 30 days of the actual completion of the test, unless an extension of time is specifically approved by the Department.

18. Any performance tests required shall be conducted and data reduced in accordance with the test methods and procedures contained in each specific permit condition unless the Director (1) specifies or approves, in specific cases, the use of a reference method with minor changes in methodology, (2) approves the use of an equivalent method, or (3) approves the use of an alternative method, the results of which he has determined to be adequate for indicating whether a specific source is in compliance.

19. At no time shall the sulfur dioxide (SO_2) emissions exceed 95 tons/twelve-consecutive-months.

20. Each process gas stream containing more than 0.10 of a grain of hydrogen sulfide (H_2S) per Scf shall not be emitted into the atmosphere unless it is properly burned to maintain the ground level concentrations of hydrogen sulfide to less than twenty (20) parts per billion beyond plant property limits, averaged over a thirty (30) minute period.

21. The flare shall comply with the following opacity standards:

    a. Except for one 6-minute period during any 60-consecutive minute period, each source shall not discharge into the atmosphere particulate that results in an opacity greater than 20%, as determined by a 6-minute average.

    b. At no time shall each source discharge into the atmosphere particulate that results in an opacity greater than 40%, as determined by a 6-minute average.

22. Compliance with the opacity standards specified in Proviso 21 shall be shown by performing *daily visual inspections* and *visible emissions observations* on emission sources as specified below:

    a. Provided that the flare is being used to burn a gas stream other than the pilot light fuel, a *daily visual inspection* shall be performed to determine the presence or absence of visible emissions.

        i. If, during *daily visual inspections* or at any other time, visible emissions in excess of the opacity standards are observed, then a *visible emissions observation* as specified in Proviso 22(b) must be performed.

ii. *Daily visual inspections* must be conducted by an observer that is familiar with the procedures of Method 9 or Method 22 of 40 CFR Part 60 Appendix A.

b. Provided that facility personnel observes visible emissions in excess of the opacity standards as specified in Proviso 21, a *visible emissions observation* shall be performed on that source.

i. Each *visible emissions observation* shall be conducted for a period of at least 15 minutes.

ii. *Visible emissions observations* must be conducted using Method 9 or Method 22 by an observer that is certified and familiar with Method 9 and/or familiar with Method 22 procedures.

c. Both *daily visual inspections* and *visible emissions observations* shall be performed as required with the following parameters:

i. Both *daily visual inspections* and *visible emissions observations* shall only be conducted during daylight hours.

ii. Record of time, date, and duration of each *daily visual inspection* or *visible emissions observation* shall be maintained.

iii. Record of corrective actions taken to eliminate visible emissions shall be maintained.

23. To demonstrate compliance with facility-wide limits of provisos 19 and 20 of the permit, the following requirements must be met:

a. The volumetric flow rate of each gas stream that is to be vented to the flare shall be monitored, recorded, and summed:

[Stream (MScf/day)]
[Facility (MScf/day)]

i. When possible and practicable, a continuous monitoring system meeting the following requirements shall be utilized:

1. In the event that multiple streams share a point of commonality, a single meter at this common point shall be utilized as representative of all streams, OR a single meter shall be utilized for each stream.

2. Calibration, maintenance and operation of metering system shall be performed in accordance to manufacturer's specification.

ii. In the event that a continuous meter is not practicable, the flow rates shall be accounted for by utilizing special estimating methods (i.e. engineer estimates, material balance, computer simulation, special testing etc.).

iii. Other flow measurement methods as approved by the Department may be utilized.

b. The following requirements must be met for the flare:

i. The H_2S feed rate shall not exceed 500 Lbs/hr.

1. A deviation is defined as anytime the average H_2S feed rate is greater than 500 Lbs/Hr.

2. A deviation triggers an immediate inspection, corrective action, and reporting within 48 hours or two work days.

c. The gas properties of each process stream that can be sent to a flare shall be determined according to the requirements specified below:

i. Testing shall consist of capturing one representative sample of each stream at a frequency of no less than once each month to comply with proviso 23(c)(iii) and no less than once every six (6) months to comply with proviso 23(c)(iv).

ii. After an initial measurement of each stream and provided that multiple process streams can be sent to the flare and that it is possible to capture a common stream whose contents would be representative of all the streams, that common stream may be used instead of the individual process streams for subsequent measurements.

iii. The hydrogen sulfide content of the gas stream shall be determined by utilizing the Tutwiler procedures in 40 CFR 60.648 or the chromatographic analysis procedures in ASTM E-260 or the stain tube procedures in GPA 2377-86 or those provided by the stain tube manufacture or equivalent methods and procedures.

[Stream (H_2S Mole %)]

iv. The molecular weight, BTU content, and VOC content of the gas stream shall be determined utilizing chromatographic analysis procedures found in 40 CFR Part 60 Appendix A, Method 18 or equivalent methods and procedures.

[Stream (Mole Wt.)]
[Stream (BTU/Scf)]
[Stream (VOC Mol%]

v. The frequency of testing, the components tested for, and the methods and procedures to be used may be modified upon receipt of Department approval.

d. Each process gas stream that has to be vented to the atmosphere shall be captured and recycled to the process or the flare so that it can be burned.

i. Compliance shall be demonstrated by conducting a process flow design evaluation of the production facility in conjunction with a visual inspection of the facility.

ii. Except when vessels and equipment are being de-pressured and/or emptied and the reduced pressure will not allow flow of the gas to a control device, the venting to the atmosphere of any process gas stream that is subject to this proviso for a duration in excess of 15 continuous minutes shall be deemed a deviation.

24. The following records shall be maintained on file in a form suitable for inspection for a period of two (2) years:

a. The date, starting time and duration of each deviation from the requirements specified in this subpart along with the cause and corrective actions taken.

b. Results of the daily visual inspection of the flare for visible emissions.

c. Results of each visual emission observation.

d. H_2S Content of Sour Gas (SG) Stream [SG H_2S Content (Mole %)]

e. Volume of SG sent to flare [SG Volume Burned (MScf/Month)]

f. SG Btu Content [SG Btu Content (BTU/Scf)]

g. SG Stream (MMBtu/Month) =
[SG Volume Burned (MScf/Month)] X [SG Btu Content (BTU/Scf)] X [1,000 Scf/MScf] X [1 MMBtu/10^6 Btu]

h. Flare operating hours (Hours/Month)

i. SG H_2S Feed Rate to Flare (Lbs/Month) =
[Stream Volume Burned (MScf/Month)] X [1000 Scf/MScf] X [1 Mole/380 SCF] X [{SG H_2S Content (H_2S Mole %)} / {100}] X [34 Lbs. H_2S/Mole H_2S]

j. SG H_2S Feed rate (Lbs/Hour) = $\frac{\text{SG } H_2S \text{ Feed Rate to Flare (Lbs/Month)}}{\text{Flare operating hours (Hours/Month)}}$

k. Flare SO_2 Emissions (Lbs/Month) =
$\frac{[\text{SG } H_2S \text{ Feed Rate to Flare (Lbs/Month)}] \text{ X } [64 \text{ Lbs. } SO_2/\text{Mole } SO_2] \text{ X } [0.98]}{[34 \text{ Lbs. } H_2S/\text{Mole } H_2S]}$

l. Flare SO_2 Emissions (Tons/Month) = $\frac{SO_2 \text{ Emissions (Lbs/Month)}}{2{,}000 \text{ (Lbs/Ton)}}$

m. Flare SO_2 Emissions (Tons/12 Consecutive Months) =
Current Month SO_2 Emissions (Tons/Month) + $\sum$ Previous 11 months SO_2 Emissions (Tons/Month)

25. Periodic Monitoring Reports should be submitted to the Department as follows:

    a. A summary of monthly measurements and calculations and the most recent records required by Provisos 24 shall be included in all reports.

    b. Any deviations from permit conditions that occurred during the reporting period shall be included in Periodic Monitoring Reports.

    c. Reports shall be semiannual and submitted on the following schedule, or as otherwise approved by the Department:

Reporting Period:	*Jan. 1 – June 30*	*Submitted by:*	*July 31*
	July 1 – Dec. 31		*Jan. 31*

ADEM

ALABAMA DEPARTMENT OF ENVIRONMENTAL MANAGEMENT

PERMIT APPLICATION

FOR

AIR POLLUTION CONTROL DEVICE

___ - ____ - ____
(ADEM Use Only)

1. Name of firm or organization: ESCAMBIA OPERATING COMPANY, LLC

2. Type of pollution control device: (if more than one, check each; however, separate forms are to be submitted for each specific device.)

   - ☐ Settling chamber
   - ☐ Electrostatic precipitator
   - ☐ Afterburner
   - ☐ Baghouse
   - ☐ Cyclone
   - ☐ Multiclone
   - ☐ Absorber
   - ☐ Adsorber
   - ☐ Condenser
   - ☐ Wet Suppression

   Wet scrubber (kind): _____

   Stage 1 - Vapor balance (type): _____

   Other (describe): FLARE; LP/HP Flare

3. Control device manufacturer's information:

   Name of manufacturer: Hero Flare Model No. PO No: 2013E039

4. Emission source to which device is installed or is to be installed:

   T1302H, Produced Water Loading, Pressurized Condensate Vessel, and during upset/MSS situations

5. Emission parameters:

	Pollutants Removed		
	Pollutant #1	Pollutant #2	Pollutant #3
	VOC	H2S	
Mass emission rate (#/hr)			
Uncontrolled			
Designed			
Manufacturer's guaranteed			
Mass emission rate (Expressed as units of standard)			
Required by regulation			
Manufacturer's guaranteed			
Removal efficiency (%)			
Designed	98%	98%	
Manufacturer's guaranteed			

6. Gas conditions:

	Inlet	Intermediate Locations	Outlet
Volume (SDCFM, 68°f, 29.92" hg)			4583 Max
(ACFM, existing conditions)			
Temperature (°F)			850
Velocity (ft/sec)			
Percent moisture			

Pressure drop across unknown (inches H_2O)

7. Stack dimensions:

Height above grade ..... 60 (feet)

Inside diameter at exit (if opening is round) ..... 2 ft. Minimum (feet)

Inside area at exit (if opening is not round) ..... _____ (sq. feet)

Base Elevation ..... 235 (feet)

GEP Stack Height ..... _____ (feet)

8. Provide a flow diagram which includes gas exit from process, each control device, location of by-pass, fan or blower, each emission point, exits for collected pollutants, and location of sampling ports.

REFER TO THE PROCESS DESCRIPTION IN THE PERMIT APPLICATION FOR THIS PHASE II PROJECT

9. Enclosed are:

- ☐ Blueprints
- ☐ Manufacturer's literature
- ☐ Emissions test of existing installation
- ☐ Particle size distribution report
- ☐ Size-efficiency curves
- ☐ Fan curves
- ☒ Other The most updated flare drawing document

10. **If the pollution control device is of unusual design, please provide a sketch of the device.**

11. **List below the important operating parameters for the device. (For example: air/cloth ratio and fabric type, weight, and weave for baghouse; throat velocity and water use rate for a venturi scrubber; etc.)**

During normal operation, it will control emissions from produced water tank, pressurized vessel, PSV, and a sump

Emergency situation, it will burn any gas stream being needed to be released.

The flare is air-assisted (smokeless flare design)

12. **By-pass (if any) is to be used when:**

NO BY-PASS

13. **Disposal of collected air pollutants:**

	Solid waste	Solid waste	Liquid waste	Liquid waste
Volume				
Composition				
Is waste hazardous?				
Method of disposal				
Final destination				

If collected air pollutants are recycled, describe:

NA

Name of person preparing application Min Wang, Ph.D, P.E.

Signature Min Wang **Date** 7/24/2014

ITEM #	QTY	DESCRIPTION
N1	1	HP FLARE GAS INLET FLANGE, 10", 150#, RFSO, A-105, NACE
N2	2	AIR PLENUM FLANGE, 1" PLATE, A-36
N3	1	VENT, 1", 3000#, HALF COUPLING, CS
N4	1	LP FLARE INLET, 1" UNION, SWAGELOK (SS-1610-6), SS
1	1	UPPER RISER, 24" DIA.x 3/8" WALL, A-53 B / A-36
2	1	TRANSITION, 3/8" PLATE, A-36
3	1	BASE, 42" DIA.x 3/8" WALL, A-53 B / A-36
4	1	INNER RISER, PIPE, 10" S40 (.365), SEAMLESS, A-106 B, NACE
5	1	ELBOW, LR, 10" S60 (.500), CS, NACE
6	1	INLET PIPE, 10" S60 (.500), SEAMLESS, A-106 B, NACE
7	1	LP FLARE TUBING, 1" OD x .083 , 304SS
RG-1	8	RISER GUIDE, 1/4" PLATE, CS
A10x24	1	AIR ASSIST FLARE TIP
VS-10	1	VELOCITY SEAL, SS
PST-1	9	PIPE SUPPORT, CS
HS-24	3	HELICAL STRAKES, 10GA, 304SS, BOLT TO STACK
HES	2	PILOT, HIGH ENERGY SPARK IGNITED WITH THERMOCOUPLE
RS-1	2	PILOT RETRACTION SYSTEM W/MANUAL WINCH
RS-MB	2	SETS, RS-1 MOUNTING BRACKETS, CS
P1	2	PILOT GAS, SS BRAIDED FLEXHOSE (1 PER PILOT), 3/8" NPT
W1	2	SO CORD WITH IGNITION WIRE AND THERMOCOUPLE WIRE
LL-8	2	LIFTING LUGS, CS
NP-1	1	NAME PLATE, 304SS
BD-1	1	BLOWER CONNECTION, CS
FP-1	1	FLOOR PLATE, 3/8" PLATE, A-36
BR-4	1	BASE RING, CS
TL-3	1	TAILING LUG, CS
GRD-1	1	GROUNDING LUG, CS
JB-1	2	JUNCTION BOX FOR HES PILOT, MOUNT ON WINCH BRACKET
IP-2	1	IGNITION PANEL (X2), 120VAC, NEMA 4X, SS, RACK MOUNT
BLWR	1	BLOWER , CENTRIFUGAL, 30HP, TEFC MOTOR
IVD	1	INLET VANE DAMPER, MANUAL
BT-42	1	TEMPLATE FOR BASE RING, CS
PG-L	1	PILOT GAS SPOOL, SHIP LOOSE

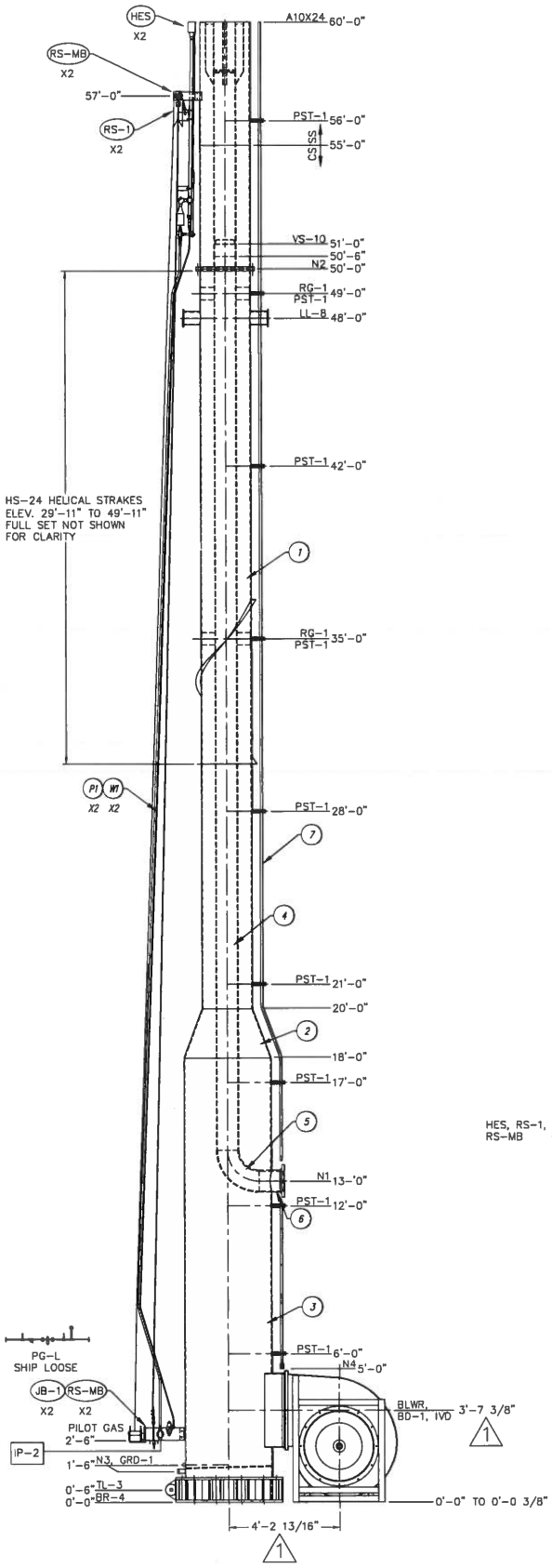

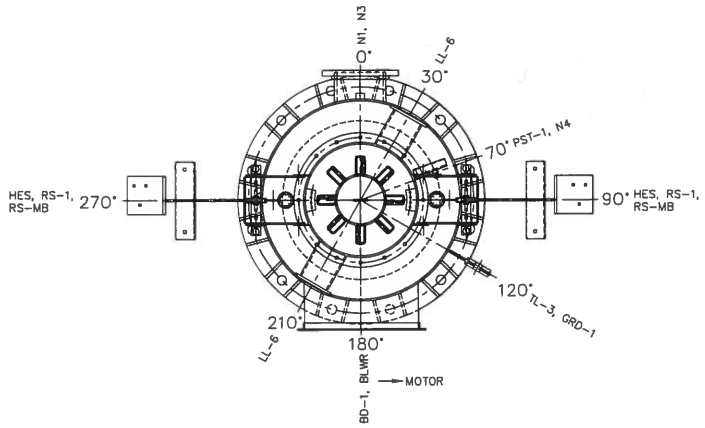

ORIENTATION

NOTE:
DRAWING ZERO IS NOT PLANT ZERO

NOTES:
1. FABRICATION PER AISC.
2. STRUCTURAL WELDS PER AWS D1.1.
3. ALL FULL PENETRATION AND PIPE WELDS TO BE PER ASME B31.1.
4. SUPPLY STUDS, NUTS, AND WASHERS FOR ALL FLANGES. NO GASKETS REQD.
5. SHIM BLOWER 0" TO 3/8" TO FIT
6. NOZZLE PROJECTION = 6"
7. SHIPPING WEIGHT: APPROX. 12,000 LBS

Hero Flare
445 FM20, Bastrop, TX 78602
Tel: (512) 772-5744 www.heroflare.com

USER	EAGLE ROCK
JOB SITE	FLOMATION, AL
JOB	

GENERAL ARRANGEMENT
FLARE STACK

THE INFORMATION ON THIS DRAWING IS THE PROPERTY OF HERO FLARE. UNAUTHORIZED USE IS FORBIDDEN.

DRAWN: NJ	APPR.	JOB NO: H14434	DWG. NO: F60A10	REV. 1
DATE: 2/12/14	DATE:			

At Golder Associates we strive to be the most respected global group of companies specializing in ground engineering and environmental services. Employee owned since our formation in 1960, we have created a unique culture with pride in ownership, resulting in long-term organizational stability. Golder professionals take the time to build an understanding of client needs and of the specific environments in which they operate. We continue to expand our technical capabilities and have experienced steady growth with employees now operating from offices located throughout Africa, Asia, Australasia, Europe, North America and South America.

Africa	+ 27 11 254 4800
Asia	+ 852 2562 3658
Australasia	+ 61 3 8862 3500
Europe	+ 356 21 42 30 20
North America	+ 1 800 275 3281
South America	+ 55 21 3095 9500

solutions@golder.com
www.golder.com

Golder Associates Inc.
6026 NW 1st Place
Gainesville, FL 32607 USA
Tel: (352) 336-5600
Fax: (352) 336-6603

Golder, Golder Associates and the GA globe design are trademarks of Golder Associates Corporation