BOARD OF DIRECTORS
BETTY H. OLSON, PH.D CHARLEY WILSON
CHARLES T. GIBSON SAUNDRA F. JACOBS
JUSTIN McCUSKER

DANIEL R. FERONS
GENERAL MANAGER

Santa Margarita Water District

August 11, 2017

California Water Boards
Loan & Grant Administration Section
Division of Financial Assistance
State Water Resources Control Board
1001 "I" Street, 16th Floor, Sacramento, CA 95814

Attention: Martin Taylor

Reference: Trampas Canyon Dam and Reservoir, C-1773

Subject: AIS Waiver Request for Butterfly Valves and Plunger Valves

Gentlemen:

This letter and Support Documentation is written in regards to an AIS waiver request for usage of a double offset, high velocity, dry shaft butterfly valves, waterworks designed stainless steel triple offset butterfly valves for continuous submerged service and an emergency drain free discharge plunger valves for the Trampas Canyon Dam and Reservoir, Contract No. C-1773.

The US EPA has been contacted and it has requested a single exception document be submitted for this consideration.

Please review this request and the enclosed information at your earliest convenience.

If you should have any questions or comments regarding our request, please so not hesitate to contact me at 949-459-6504.

Respectfully,
SANTA MARGARITA WATER DISTRICT

Jeffrey P. McDonnell, P.E.
Senior Project Engineer

Enclosures: Support Documentation for AIS Waiver Request
Existing EPA Decision Memo dated 20FEB15_DCWCD Victory Pipeline_BFVs
Existing EPA Decision Memo dated 20FEB15_DCWCD Victory Pipeline_Plunger Valve

Supporting Documentation for AIS Waiver Request

General

The Santa Margarita Water District Trampas Canyon Dam and Reservoir project is designed to provide 5000 AFY of reclaimed water storage. Treated effluent from the Chiquita Water Reclamation Plant will be changed to minimize ocean outfall and maximize reuse via increased seasonal storage.

The Applicant, Santa Margarita Water District, requests butterfly valve and plunger valve waiver exemption to meet the design and service life criteria for the proposed project. Project entails the of reconstruction of an existing dam and reservoir to provide seasonal and operational storage of 5,000 acre-feet (af) of recycled water to meet demands for nondomestic water in South Orange County within the Applicant's service area. The purpose of these facilities is to store water during the winter months when more supply is available and demands are low, then use the water during summer months when the demands are in excess of supply. Bidding August 9, 2017. 675 days to total completion. Note mechanical appurtenances are purchased soon after bid due to long leads and delivery needs for mechanical installation.

— Description of the foreign and domestic construction materials
Valves will be made by VAG in Germany and at a VAG German Manufacturing Plant in Taicang China.

Foreign Iron and Steel Materials consist of :

- Valve bodies Double Offset Butterfly and Plunger Valves: Ductile Iron
- Valve bodies Triple Offset Butterfly Valves: 316 Stainless Steel
- Valve Discs Double Offset Butterfly Valves: Ductile Iron
- Valve Discs Triple Offset Butterfly Valves: 316 Stainless Steel
- Valve Shafts: 316 SS, 304, 413 Stainless Steel
- Bearings: No lead bronze

— Unit of measure
Per Each- Valve.

— **Quantities. Approx. Price**

Description	Size	Qnty	Price	Extended
Stainless Steel Triple Offset Butterfly Valves- continuously submerged service on Inlet/Outlet structure with pneumatic operators (@separate cost of approx.. $45,000 each)	24"	8	$20,000	$160,000
Double offset butterfly valves-buried service outlet system piping	16"	2	$3500	$7000
Double offset butterfly valves-buried service I/O system piping	30"	4	$11,000	$44,000
Double offset butterfly valve isolation guard valve on high velocity free discharge	30"	1	$25,000	$25,000
RIKO Plunger Valve with Hood- Free Discharge service approx. 30 fps	30"	1	$110,000	$110,000

— **Time of delivery or availability**

Approximately 24-26 weeks for complete delivery after submittal review process.

— Location of the construction project

The Project is located within unincorporated Orange County, California in Trampas Canyon on the Rancho Mission Viejo, east of Interstate 5 (I-5), approximately one mile south of Ortega Highway (SR-74), and just west of Cristianitos Road. The formal address is as follows:

31402 Ortega Highway,
San Juan Capistrano, CA 92675
APN 125-162-44

— Name and address of the proposed supplier

VAG- USA
9025 Marshall Road, Cranberry Township, PA 16066

VAG- Germany
VAG-Armaturen GmbH, Carl-Reuther-Str. 1, 68305 Mannheim, Germany
Phone: +49 (621) 7490

VAG Water Systems Co., Ltd
No. 15 Guangzhou Road East
Taicang 215400 Jiangsu Province

— A detailed justification for the use of foreign construction materials

The project is a Dam and Hydro of approximately 5000 af of recycled water impoundment located fairly close upstream to a heavily traveled roadway, Highway 74. The Department of Safety of Dams (DSOD) have reviewed and approved plans. Design of project included system velocities in excess of 27 fps which exceed AWWA C504 design criteria.

AWWA C504 valves are designed for a 16 fps maximum full open velocity and the project valves exceed this condition and especially under emergency conditions for a large water impoundment in a seismic activity area of Southern California.

AWWA C504 is a solid unified waterworks platform (Standard) but it does have and state its limitations. AWWA C504 states, valves shall be designed for a "**maximum full open velocity of 16 fps (4.9m/s)"** and that ***"Some hydraulic systems can produce flow velocities much higher than 16 fps described in this standard (AWWA C504") Typically high velocities can result from line break, during firefighting or in surge relief*** *(ex. free discharge)* ***applications*****. The effects of high velocities and asymmetrical turbulent flow conditions can result in high loads and torque requirements, which are unaccounted for in this standard. These design conditions should be clearly specified by the purchaser".**

Worth noting, is that VAG's lead valve Engineer is an acting member of the AWWA C504 Butterfly Valve committee.

Where Triple Offsets are designed for the project, there is only one manufacturer of waterworks basis of design for Triple Offsets. API (American Petroleum Institute) basis of design and testing were reviewed but not selected. This manufacturer was selected from a design review which included specialization to water media

in design- hydro-dynamic design, serviceability- on site replaceable body and disc seats versus requiring the removal of valve for servicing of seat as per API designs.,

Plunger Valves were reviewed and selected as they are a compact and easily field serviceable free discharge valve that is designed to remain leak-free for expectedly decades. With Plungers, should the valve develop a leak, the seals can be replaced on site by District personnel/ Alternate designs considered require the valves to be removed from service for extended durations. Plunger valves were chosen for the project based list of required design criteria, including longevity, serviceability, compactness, simplicity in design, compact discharge jet profile, versatility such as the ability to easily and quickly modify the valve on site to different flow or hydraulic conditions or use at another installation with different hydraulic conditions. Sleeve valves and Fixed Cone valves were considered but did not meet the specified quality level required for the project.

8- 24" Stainless Steel Triple Offset Butterfly Valves designed for waterworks applications

1. VAG produces the only waterworks basis of design Triple Offset Butterfly Valve.
   A. Triple Offsets are based on lower velocity industrial processes and the API (American Petroleum Institute) and not waterworks. Different design and testing criteria. Oil and Water are different mediums and conditions.
   B. API Triple Offsets are above grade valves with manual pulldown valve packing glands. A manual pulldown packing is a maintenance item and not recommended for valves that are continuously submerged in water.
2. Specification velocities of 32 fps well exceeds AWWA C504 design of 16 fps. AWWA are municipal valves and not Dam and Hydro valves. API valves are not hydrodynamically optimized especially at high emergency velocities and would be subject to vibration and cavitation.
3. VAG Triple Offset butterfly valves are the only triple offset valve with field replaceable metal body and disc seals. All other Triple offset manufacturers have only one replaceable metal seal. As such, API valves would have to be removed from service and sent back to the factory if the non-replaceable metal seal is damaged. Months long remediation durations are unacceptable for underwater conditions. Expensive process to replace leaking valve.

2-16" Double offset butterfly valves-buried service

1. No US manufacturer designs and builds a double offset butterfly valves for waterworks applications meeting and exceeding AWWA C504 design criteria.
2. Resilient seated double offset butterfly valves are designed specifically to prevent the elastomeric seal from being compressed when the valve is in the open position. As no elastomeric contact, no compression set of the elastomer and valve is leak free when closed. US designs are zero offset or single offset from the 1950's and 1960's with little to no improvement in designs made since first developed.
3. No US waterworks and or AWWAC504 valve manufacturer designs their valves for velocities above 16 fps (AWWA C504). Velocities under emergency conditions: Earthquake, line-break, emergency draining of Reservoir would exceed 16 fps. VAG double offset will handle velocities to 50 fps- line-break conditions.
4. VAG Double Offset EKN provides a modern dry shaft and dry disc hub. Best and correct shaft seal placement provides for a dry shaft which prevents premature corrosion of the body shaft bore which is wetted raw metal in both current AWWA and API designs. The valve will remain corrosion free for durations well exceeding AWWA wetted shaft designs. Both traffic and

wilderness areas will not be disturbed for longer durations. The dry shaft design allows an actuator to be removed without dewatering a pipeline, saving rate payer money.

4-30" Double offset butterfly valves- buried service

See Above for 16".Same.

1-30" Double offset butterfly valve isolation guard valve on high velocity free discharge

1. No US manufacturer of Dam and Hydro designed butterfly valves to a max minimum of 27.8 fps with multiple successful similar applications US/worldwide.
2. Valve will be specifically designed and reviewed by waterworks engineers for this application. The valve is not an off the shelf catalogue valve.
3. Valve will need to be designed specifically to prevent turbulence at intake of free discharge valve to allow proper functioning and operate vibration free.
4. DSOD (Department of Safety of Dams) have approved design, want a valve located in the vault with a position indicator at close distance to the free discharge valve.

1-30" RIKO Plunger Valve for free discharge service

1. There are no US made Plunger Valve manufacturers.
2. Plunger valves are designed for free discharge applications- here a max minimum of 27.8 fps
3. Plunger valves can remain closed for extended periods of time without damaging galvanic corrosion as present in other valve designs. (Specific to application).
4. The operating mechanism of Plunger valves are much less complex than alternate designs reviewed.
5. The vault structure has been sized, designed and approved to accommodate the compact valve and the discharge jet force and profile at max. velocity produced by a Plunger valve.
6. Plunger Valves are a modern, interchangeable, compact design for free discharge. Plunger valves have tenured demonstration of longevity and correct functionality. Alternate designs have remained dominantly static since the 1970's or prior.
7. Plunger valves can be easily and quickly refurbished or repaired in-situ by a minimal mechanical skillset and easily by District Personnel. Alternate designs need to pulled from the site and shipped out of state or out of country for repairs or refurbishment by Factory personnel. For alternate designs, the duration for simple elastomeric seal replacement would take durations of 6-20+ weeks leaves the site vulnerable. Plunger valve elastomeric seal replacement would occur within a workday with no removal of valve.
8. Plunger valves are resilient seated and true zero leak free valves. No nuisance discharges of water.
9. Plunger valves have demonstrated high customer system longevity. Many agencies are changing from older alternate designs to using Plunger valves.
10. Plunger Valves are a compact design typically 50% the length of Sleeve Valves and Fixed Cone Valves. Smaller vault footprint used on wilderness site.

Assistance recipient made a good faith effort to solicit bids for domestic iron and steel products, as demonstrated by language in requests for proposals, contracts, and communications with the prime contractor.

AIS Requirement Excerpts throughout bid documents:

American Iron and Steel Provisions

1. All iron and steel products used in the Project are to be produced in the United States in a manner that complies with the American Iron and Steel Requirement, unless a waiver of the requirement is approved by the Engineer. The Contractor shall provide all necessary information to support a waiver of the American Iron and Steel Requirements if requested by the Engineer or District.

The Contractor shall submit written certification to the Engineer that all iron and steel products used in the Project meet the requirements of the American Iron and Steel Provision. The certification shall include at a minimum: (1) the specific product delivered to the Project site; (2) the location (i.e. city and state) of the foundry/mill/factory where the product was manufactured; (3) the name of the Project and the jurisdiction where the product was delivered; and, (4) a signature of the Contractor's designated representative.

Submit American Iron and Steel (AIS) certification per P.L. 113-76, Consolidated Appropriations Act, 2014, Section 436, for all items specified herein.

Specification Excerpt on "or equal"

Unless specifically designated in the Contract Documents, whenever any material, process, or article is indicated or specified by grade, patent, or proprietary name or by name of manufacturer, such Specifications shall be deemed to be used for the purpose of facilitating the description of the material, process or article desired and shall be deemed to be followed by the words "or equal." Contractor may, unless otherwise stated, offer for substitution any material, process or article which shall be substantially equal or better in every respect to that so indicated or specified in the Contract Documents. However, the District may have adopted certain uniform standards for certain materials, processes and articles.

c. Contractor shall submit requests, together with substantiating data, for substitution of any "or equal" material, process or article no later than ten (10) days after award of the Contract. To facilitate the construction schedule and sequencing, some requests may need to be submitted before ten (10) days after award of Contract. Provisions regarding submission of "or equal" requests shall not in any way authorize an extension of time for performance of this Contract. If a proposed "or equal" substitution request is rejected, Contractor shall be responsible for providing the specified material, process or article. The burden of proof as to the equality of any material, process or article shall rest with the Contractor. The District has the complete and sole discretion to determine if a material, process or article is an "or equal" material, process or article that may be substituted.

d. Data required to substantiate requests for substitutions of an "or equal" material, process or article data shall include a signed affidavit from the Contractor stating that, and describing how, the substituted "or equal" material, process or article is equivalent to that specified in every way except as listed on the affidavit. Substantiating data shall include any and all illustrations, specifications, and other relevant data including catalog information which describes the requested substituted "or equal" material, process or article, and substantiates that it is an "or equal" to the material, process or article. The substantiating data must also include information regarding the durability and lifecycle cost

of the requested substituted "or equal" material, process or article. Failure to submit all the required substantiating data, including the signed affidavit, to the District in a timely fashion will result in the rejection of the proposed substitution.

— Supplier information or pricing information from a reasonable number of domestic suppliers indicating availability/delivery date for construction materials

No domestic suppliers of waterworks Plunger Valves, AWWA Double Offset dry shaft butterfly valves, High velocity, low turbulence guard valves, waterworks designed Triple Offset Butterfly Valves (vs. API standards and media).

— **Documentation of the assistance recipient's efforts to find available domestic sources, such as a description of the process for identifying suppliers and a list of contacted suppliers**.

SMWD are continually engaged with the market place through tradeshows, direct contact with manufacturers and manufacturers' representatives as well as through engineering design project work with Consulting Engineers. SMWD know the marketplace well and there are no current US manufacturers of Plunger Valves or no Double Offset AWWA C504 with upgraded designs such as dry shafts, high velocity field replaceable seals and a waterworks basis of design Triple Offset Butterfly valves or High Velocity Guard Valves meeting the specified quality and functionality of the project design requirements (dominantly line-break and free discharge conditions). An internet search also yielded the same results.

— Project schedule
Bid Date: August 15th, 2017. Operable Reservoir and functioning Intake Structure = Completion 675 days from award.

— Relevant excerpts from project plans, specifications, and permits indicating the required quantity and quality of construction Materials

24" Stainless Steel Triple Offset Butterfly Valves designed for waterworks applications
Spec excerpts:

- Valves shall be operable and hydrodynamically stable for fluid velocities up to -32 fps
- The valve size shown in the drawings is the inside diameter of the valve body. The port diameter shall not be more than 1.25 inches smaller than the nominal valve size.
- Metal seated butterfly valves shall be specifically designed for water service applications. API and Industrial valves shall not be supplied.
- Valves shall have a field-replaceable laminated seal ring retained on the disc and field replaceable seat ring located in the valve body
- Valve shafts and disc hubs shall be dry and non-wetted.
- Valve shaft shall be a dual stub shaft two-piece unit.
- Adjustable manual pulldown packing glands will not be accepted

30", 16" Double offset butterfly valves-buried service
Spec excerpts:

- Butterfly valves shall be of the double offset design, short body and either flanged or mechanical joint for buried valves.
- Valve shall conform to and exceed AWWA C504, Class 150B.
- Valves shall be designed to handle line break velocities to over 30fps and the resulting localized velocities across the seat without damage.
- Valve design shall be dry shaft and disc hub and allow for actuators to be removed from the valve without dewatering the pipeline.

30" Double offset butterfly valve isolation guard valve on high velocity free discharge
Spec excerpts:

Notice and exceptions shall be provided if the valves design or actuators design, exclusive of safety factors, is not fit for the application conditions. This shall especially be noticed for valves which are not expressly designed for dam and hydro waterworks service conditions inclusive of continuous pressurized water service, potable drinking water applications, continuous buried service, intermittent or continuous submerged services in potable or non-potable waters, and or high pressure, high differential or high velocity conditions as a result of free discharge, line-break or line loading.

Provide a factory signed statement that elastomeric seal replacement: seal removal, new seal installation and correct valve pressure seal adjustment, shall take no more than 3 hours for AWWA C504 size valves and that no specialized skillset or tools are required to accomplish this task.

Published manufacturers literature showing the valve is intended for sale into dam and hydro applications. Only valves specifically designed for high velocity continuous pressurized waterworks applications will be accepted. Neither general service nor industrial valves will be accepted.

Zero, single and API based triple offset butterfly valve designs are not acceptable. The Butterfly valve shall be rated to a working pressure of 250 psi excluding safety factors and the valve and its elastomeric seal shall be suitable to 50 fps fluid velocity flows.

Both the disc and elastomeric seal retainer shall have recesses designed to retain a dual shouldered seal under extreme localized velocities, at full differential opening, free discharge and/or line-break closing.

The seal shall not scallop, cold flow or tear at localized velocities less than 300 fps.

Shaft Seal: Shaft seal shall not need periodic manual adjustment. They shall be multi-oring seals protecting both the OD and ID of the shaft bearings. They shall prevent pressurized system water from entering the uncoated valve disc hub and valve body shaft bore. The valve shaft shall remain non-wetted and unpressurized. The non-wetted shaft shall allow the actuator to be removed without dewatering the pipeline

30" RIKO Plunger Valve for free discharge service
Spec excerpts:
Furnish horizontal in-line 30-inch ANSI 150 class Plunger Valve complete with 2" operating nut, extension stem and handwheel floor-stand.

The valve manufacturer shall have a minimum of ten (15) years of experience in the production and sales of plunger valves. The valve Manufacturer shall also have at least twenty (20) installed Plunger Valve references in the United States that have been in operation in last five (5) years.

The valve manufacturer shall provide 24 hour manufacturers response for any field service requirement
The entire plunger valve must have verifiable Certification of Compliance with the NSF 61 Annex G - Drinking Water System Components Standard. Certifications shall accompany submittals.

Noise: Operating noise levels shall not exceed 95 decibels (dBA) at a distance of three (3) feet from the valve at the normal flow point.

The plunger shall utilize an internal slider-crank mechanism driven by a 90 degree AWWA worm gear.
The seals of the plunger valve shall allow the valve to be drip and bubble tight in both flow directions for the long term and without the need for premature seal replacement.

Valve shall be provided with a dry body shaft bore to prevent corrosion of the uncoated shaft bore
The movement of the plunger shall be controlled by means of a self-locking quarter turn, 90 degree AWWA worm gear. AWWA worm gear shall come equipped with externally adjustable mechanical stops to limit valve travel in both the open and closed positions.

The Plunger Valve must be easy to maintain, as such it shall have the profile sealing ring in the downstream flange. A mechanic shall not have to reach inside the valve to perform seat replacement. The profile sealing ring shall be interchangeable without dismantling the valve from the pipeline.

Plunger Valve shall come equipped with a valve support consisting of a separate footplate and valve baseplate. Valve footplate shall be anchored in valve pedestal to prevent endue movement during a seismic event.

• Waiver request includes a statement from the prime contractor and/or supplier confirming the non-availability of the domestic construction materials for which the waiver is sought
SMWD can make this request from the Prime Contractor post bid but this process has already been vetted by by both SMWD and the Consulting Engineer.

• Has the State received other waiver requests for the materials described in this waiver request, for comparable projects?

Waiver requests have not been received by the State of California but by the State of Utah to US EPA. Please see attached EPA granted waiver exceptions for Double Offset Butterfly Valve and Plunger Valve for 2015 project.

DOUBLE OFFSET BUTTERFLY VALVE

The following is a brief overview on the high spec VAG EKN butterfly valve and a few of its key attributes and characteristics.

Valve Characteristics that Require Exemption:

Double Offset Butterfly Design with NSF61 and NSF372 Required: No US manufacturers of this design. Note

NSF 61 and NSF372 (NSF = National Sanitary Foundation) are requirements demonstrating safe drinking water and no lead products.

The double offset design assures a 100% leak free valve over many decades. A leak-free design is needed to isolate both the upstream and downstream water sources. The modern double offset design prevents the elastomeric seal from being compressed when the valve is in the open position. Current AWWA designs are single offset or zero offset whereby the disc compresses the elastomeric seal and are very highly prone over time to a compression set of the elastomeric seal. The compression set or permanent indentation(s) of the elastomeric seal become a leak path.

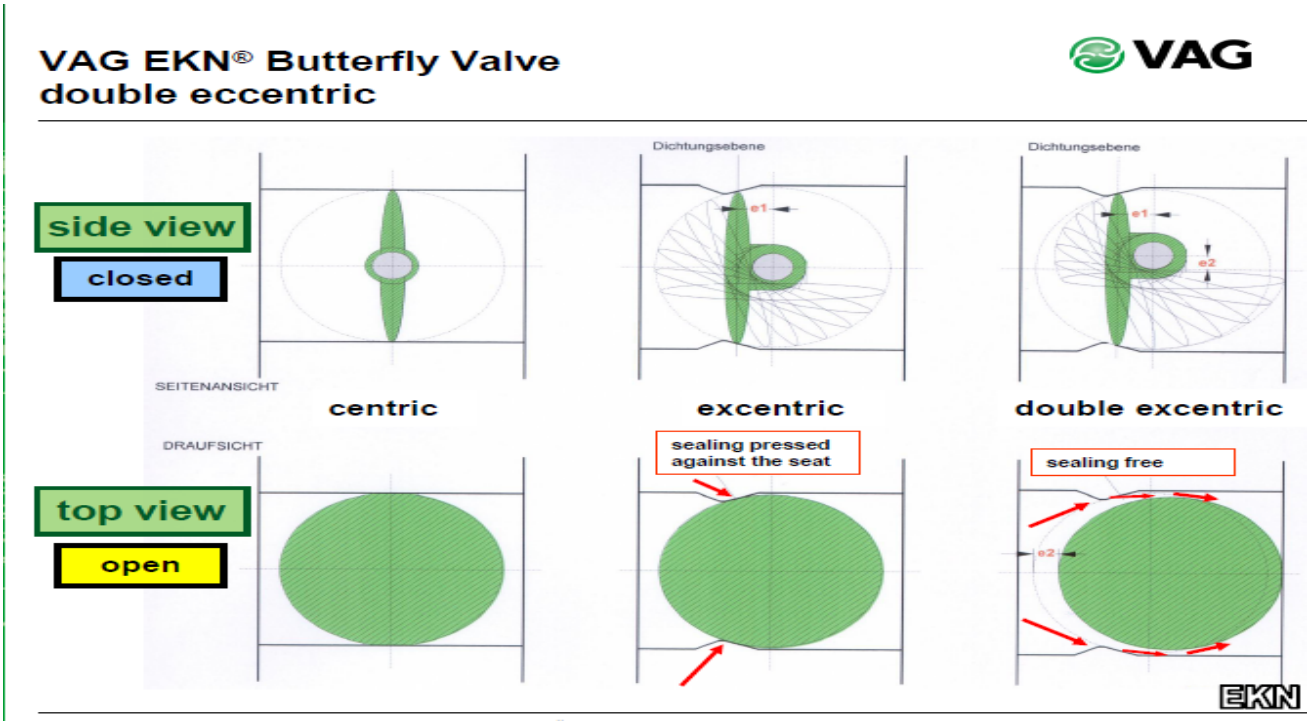

High Velocity Design: AWWA C504 Standards (AWWA= American Water Works Association) to which municipal potable drinking water valves are designed to comply with, are designed to a maximum flow rate of 16 feet per second. The EKN Butterfly Valves are designed to line-break conditions of over 50 feet per second. This means that should a water line break occur, the EKN is designed to handle the higher velocities associated with emergency condition isolation. No US designed or manufactured valve meets this criteria.

High Velocity Elastomeric Seal: The VAG EKN elastomeric seal is rated to over 300 feet per second. As noted in item (2) above, the high pipeline velocities that exist in emergency conditions produce very high localized velocities when the valve is being closed at shutdown (think thumb over the end of a garden hose). The EKN is designed to handle both pipeline high velocities as well as localized velocities. This is attribute is not measured or required US AWWA valves.

A corrosion free zone of both a dry shaft and disc hub versus a wetted valve shaft. This allows the actuator to be removed without needing to dewater the pipeline. In contrast, wetted shaft and hub subject to increased input torque requirements, corrosion and bearing failure.

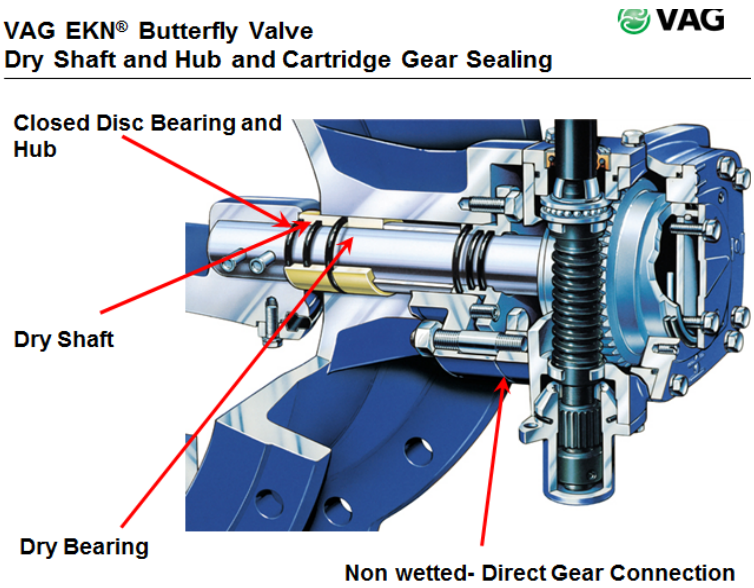

All sizes have a very quickly field replaceable seal (if ever needed). Seal replacement in less than an hour to a few hours max on very large valves (not days). Very easy- nothing complex. Factory skill and labor not needed.

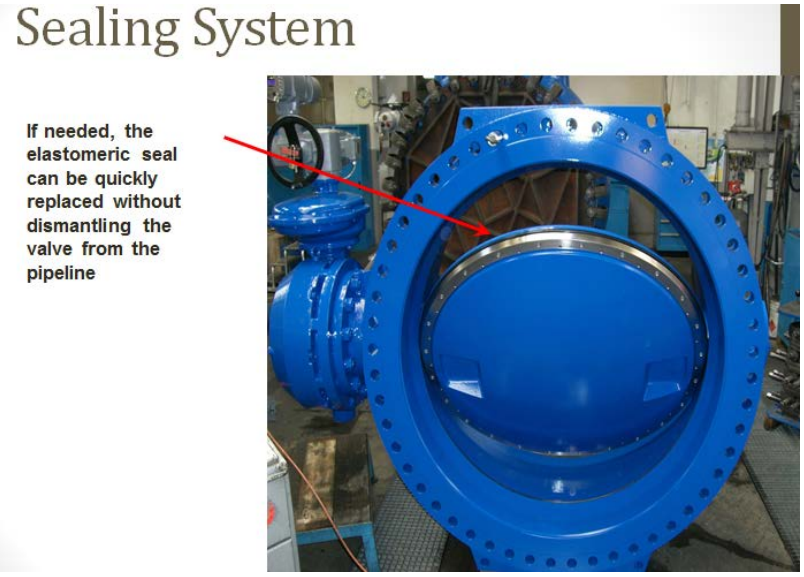

The VAG EKN Butterfly Valve is supported in the United States by GA Industries out of Pennsylvania as well as by factory personnel and REPS located across the country.

.

PLUNGER VALVE

Valve Characteristics that Require Exemption:

1. No US made anti-cavitation and flow Plunger Valves: All are imported.

2. Alternate potential designs (Fixed Cone and Sleeve valves) are maintenance intensive:

Sleeve Valves were designed in the early 1970's and Fixed cones prior. Both utilize a complicated three gear operating system. Their high comparative costs, higher comparative maintenance, high repair costs (to over $700,000). The higher comparative issue rates have had them removed from acceptable service at many water utilities such as Central Utah Water Conservancy District, Southern Nevada Water Systems, San Diego County Water Authority, Los Angeles Department of Water and Power, Metropolitan Water District of Southern California (contacts available).

The sleeve valve design would utilize small hole perforations which are prone to clogging. In contrast Plunger Valves would use an open annular flow path, allowing the passage of large solids. Fixed Cone valves can pass larger solids but are not designed to be installed in a vault with an energy dissipating headwall.

Plunger Valve Overview:

The plunger valve's main design features including compact valve design, linear flow characteristics, and custom outlet configurations. All of which have contributed to the successful application of plunger valves to date in the water and hydropower industries. The plunger valve has performed superbly over other valves in the areas of anti-cavitation, noise and vibration reduction, debris passage, closure tightness, operational reliability, durability, and life-cycle cost efficiency. The plunger valve is a better choice in terms of technical soundness, operations and maintenance requirements, and valve economics for handling energy dissipation and/or flow regulation, particularly under severe or emergency flow conditions.

Figure 2. VAG Plunger Valve, Cross Section View

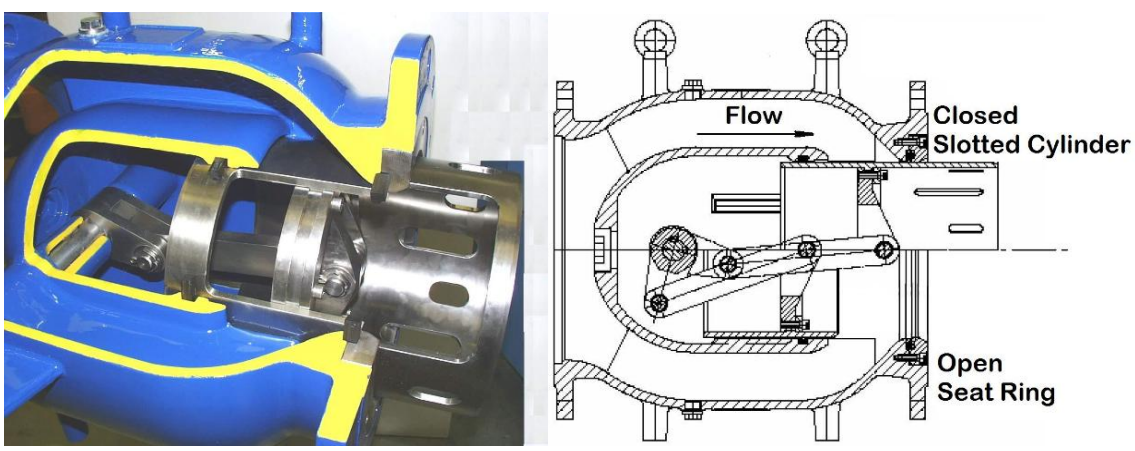

VAG Plunger Valve Design Features

VAG has devoted itself to researching and developing the plunger valve since late 1940's. To solve the problems associated with small valve openings, VAG invented a number of extended outlet parts (extensions to the plunger itself) to meet the requirements of specified operating conditions. Figure 3 shows three outlet modifications for a plunger valve; they are the seat ring type, slotted cylinder and orifice cylinder. A proper use of each individual one or a combination of them will alleviate flow-induced vibration, reduce noise to an acceptable level, and avoid cavitation damages.

Figure 3. VAG Plunger Valve Typical Outlet Configurations (Left to Right): Original Outlet Design, Seat Ring, Slotted Cylinder and Orifice Cylinder Custom-built Cylinder

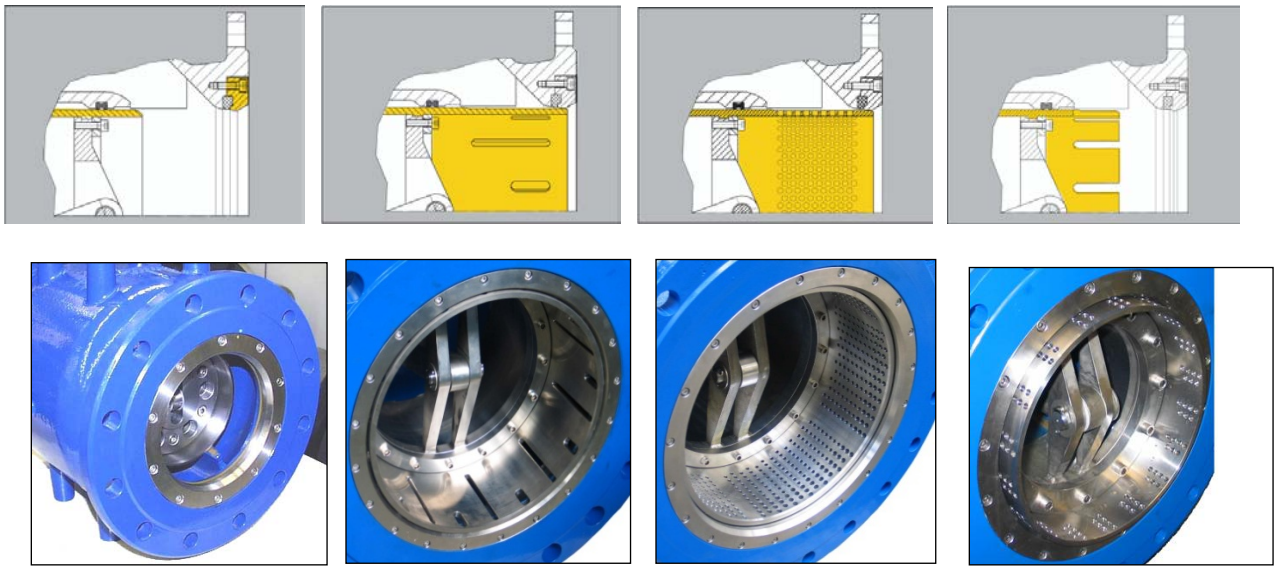

VAG has the ability to custom design the outlet parts of plunger valve, and its modular structure facilitates changes in the characteristics of the valve. This is a very important advantage of plunger valve because it can be tailored to meet a specific operating condition even after the being installed into the pipelines. Figure 4 shows a 24-inch plunger valve with a typical orifice outlet. The orifice outlet however is not suitable for a raw water system where debris, large size fish, and shells are not uncommon. Debris is easily trapped inside the valve and can require increased maintenance.

Figure 4. VAG Plunger Valve, ANSI-800 (32 inches) for a Hydropower Plant in Boulder/Colorado

VAG has developed a compact body for the plunger valve. Figure 5 shows VAG's latest plunger valve design iteration, the RIKO model. Based on extensive hydrodynamic testing results, the outer valve body is optimally shaped. Both the inner and outer bodies are cast as a single piece of ductile cast iron, connected by streamline-shaped ribs. The inner body has a spherical shape at the inlet end. After the inlet, the circular section of the pipe becomes an annular section within the valve; the shape of annular space continues narrowing to the seat

ring at the outlet. To avoid use of complicated internal moving parts, a simple, rugged slider crank is put into the chamber of the inner body. The slider-crank mechanism is rotated approximately 90 degrees from the valve "open" to "close" position by an external operator (electric, hydraulic, etc.). The slider crank imparts a linear motion in the upstream-downstream direction to the plunger sleeve by means of a connecting rod. The plunger is securely guided on rails cast into the inner body chamber that receives a bronze welded overlay to act as a bearing surface. As the plunger moves in and out, the annular cross section of the flow area changes accordingly.

All internal parts are made of stainless steel to provide high tensile strength and corrosion resistance. The way the plunger moves relative to the upstream and downstream pressure completely eliminates hydraulic thrust being exerted on the operator compared with its predecessor and ensures that the operator's input force only needs to overcome the friction between the plunger and bronze bearing rails. The rails also make the plunger insensitive to deposit or corrosion, require low operating torques, minimize maintenance requirements, and prolong the valve's service life. Since the first installation of this type of plunger valve design about 25 years ago, there has never been a case where a VAG plunger valve needed to be taken out of service to replace worn moving parts.

Figure 5. VAG Plunger Valve, Latest RIKO Model

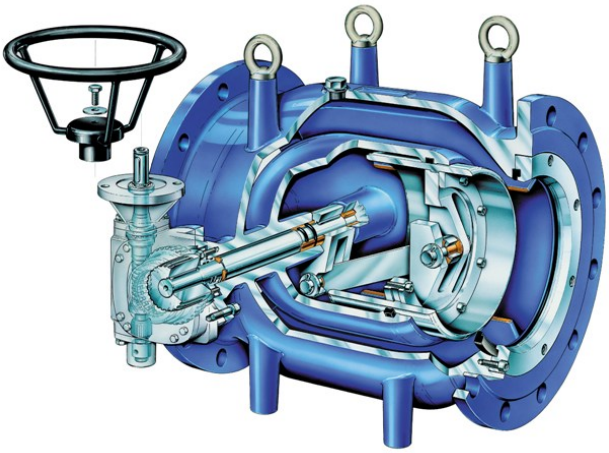

This newly designed RIKO plunger valve as shown in Figure 5 has a remarkable reduction in physical dimensions over its predecessors with equal flow capacity. This makes it possible to substantially reduce the size of a control facility structure housing such valve. For example, a 36-inch balanced needle valve weighs 28,000 lbs and has a face-to-face dimension of 112 inches. Comparatively, a VAG plunger valve of 36 inches in diameter weighs only 5,600 lbs (about a quarter of the needle valve) and has the face-to-face length of 53 inches (about half of the sleeve valve).

Table 1. Summary of Comparisons Among Typical Valves in the US

Item	Valve Type		
	Plunger Valve	Fixed Cone Valve	Sleeve Valve
Body Material	Ductile cast iron or Carbon steel	Carbon steel, Stainless Steel	Carbon steel, Stainless Steel
Trim Material	Stainless steel	Stainless steel	Stainless steel
Valve Seat	Stainless steel	Stainless steel	Stainless steel
Leakage Rate	Drop tight	Drop tight but prone to nuisance leaks	Permissible leak. Prone to nuisance leaks
Actuating System	Simple. One 90 degree Quarter turn actuator	Complicated. Dual screw or Dual hydraulic 3 gears used.	Complicated. Dual screw or Dual hydraulic. 3 gears used.
Able to Pass Debris	Yes	Yes	No
Reliability & Durability (Continuous Operation)	High	Intermediate-High	Low-Intermediate
Capital Cost	Low to Intermediate	Intermediate	High
Life-Cycle Cost	Low	Intermediate	High

VAG Plunger Valve Worldwide Installations

Since the 1960's and through various design upgrades based on field response data, VAG has produced and installed more than 10,000 plunger valves in 41 countries. The valve size ranges from 6 inches to 96 inches.

The VAG Plunger valve is supported in the United States by GA Industries out of Pennsylvania as well as by factory personnel and REPS located across the country and two factory agents located within 15 minutes of project site.

.

UNITED STATES ENVIRONMENTAL PROTECTION AGENCY
WASHINGTON, D.C. 20460

FEB 20 2015

OFFICE OF WATER

DECISION MEMORANDUM

SUBJECT: Project Waiver of American Iron and Steel Requirements for Double Offset Butterfly Valves in the Duchesne County Water Conservancy District Victory Pipeline Project
Waiver Number 08-DW-0001c

FROM: Peter Grevatt, Director
Office of Ground Water and Drinking Water

The U.S. Environmental Protection Agency is hereby granting a project-specific waiver pursuant to the American Iron and Steel requirements to the Duchesne County Water Conservancy District for the purchase of non-domestic double offset butterfly valves. This waiver permits the use of double offset butterfly valves manufactured outside of the United States to be used in the DCWCD Victory Pipeline Project in Duchesne County, Utah, because no known domestic manufacturers produce an alternative that meets the project's technical specifications. This is a project-specific waiver and only applies to the use of the specified product for the referenced project funded by the Drinking Water State Revolving Fund. Any other project funded by either the Drinking Water or Clean Water State Revolving Fund that wishes to use the same product must request a separate waiver based on the specific project circumstances.

Rationale: The AIS provisions require DWSRF assistance recipients to use specific domestic iron and steel products that are produced in the United States if the project is funded through an SRF assistance agreement unless the Agency determines that it is necessary to waive this requirement. EPA has the authority to issue waivers in accordance with Section 424(b)(2) of Public Law 113-235, the "Consolidated and Further Continuing Appropriations Act, 2015." The provision states in part: "[the requirements] shall not apply in any case or category of cases in which the Administrator of the Environmental Protection Agency…finds that…iron and steel products are not produced in the United States in sufficient and reasonably available quantities and of a satisfactory quality."

The purpose of the double offset butterfly valves in the DCWCD Victory Pipeline Project is to isolate both the upstream and downstream water sources to the flow and anti-cavitation control plunger valves, which are located below grade in limited access confined space vaults. The vaults must remain dry since they contain electrically and electronically charged devices, especially when DCWCD personnel are present. The double offset design ensures a 100 percent

leak-free valve by preventing the elastomeric seal from being compressed when the valve is in the open position. The compression set or permanent indentation(s) of the elastomeric seal on single offset or zero offset valves could become a leak path. The project's technical specifications also require that the valves comply with the American Water Works Association C504 Standard, meaning that the valves must allow a maximum velocity of 16 feet per second. DCWCD found no domestically manufactured double offset butterfly valves that meet this velocity criterion. In addition, the project's technical specifications require the butterfly valves to have a high velocity elastomeric seal, which is rated to over 300 fps, because very high localized velocities could be produced when the valve is being closed. The assistance recipient was unable to find double offset butterfly valves manufactured domestically that meet the project's technical specifications.

EPA conducted market research on the supply and availability of double offset butterfly valves and concluded that there are no domestic manufacturers of these valves that meet the project's technical specifications, supporting DCWCD's claim. EPA identified two manufacturers capable of providing domestically produced double offset4r5tt butterfly valves in the sizes required for the project; however, one of the manufacturers could not provide valves that meet the 100 percent leak proof requirement and the other manufacturer could not provide a product that meets the AWWA C504 Standard for high velocity design.

Having established both a proper basis to specify the particular product required for this project and that this product was not available from a manufacturer in the United States, DCWCD is hereby granted a waiver from the AIS requirements for the Victory Pipeline Project. This waiver permits the purchase of non-domestic double offset butterfly valves using DWSRF funds as documented in the State of Utah's waiver request submittal on behalf of the assistance recipient, dated October 30, 2014.

Legal Authority: Legal authority for the AIS requirements for DWSRF projects is included under P.L. 113-235, the "Consolidated and Further Continuing Appropriations Act, 2015," under the authority of Section 424(b)(2) and also previously under P.L. 113-76.

If you have questions concerning the contents of this memorandum, please contact Kiri Anderer, Environmental Engineer, Drinking Water Protection Division, at anderer.kirsten@epa.gov or (202) 564-3134.

UNITED STATES ENVIRONMENTAL PROTECTION AGENCY
WASHINGTON, D.C. 20460

FEB 20 2015

OFFICE OF WATER

DECISION MEMORANDUM

SUBJECT: Project Waiver of American Iron and Steel Requirements for Plunger Valves in the Duchesne County Water Conservancy District Victory Pipeline Project Waiver Number 08-DW-0001a

FROM: Peter Grevatt, Director
Office of Ground Water and Drinking Water

The U.S. Environmental Protection Agency is hereby granting a project-specific waiver pursuant to the American Iron and Steel requirements to the Duchesne County Water Conservancy District for the purchase of non-domestic plunger valves. This waiver permits the use of plunger valves manufactured outside of the United States to be used in the DCWCD Victory Pipeline Project in Duchesne County, Utah, because no known domestic manufacturers produce an alternative that meets the project's technical specifications. This is a project-specific waiver and only applies to the use of the specified product for the referenced project funded by the Drinking Water State Revolving Fund. Any other project funded by either the Drinking Water or Clean Water State Revolving Fund that wishes to use the same product must request a separate waiver based on the specific project circumstances.

Rationale: The AIS provisions require DWSRF assistance recipients to use specific domestic iron and steel products that are produced in the United States if the project is funded through an SRF assistance agreement unless the Agency determines that it is necessary to waive this requirement. EPA has the authority to issue waivers in accordance with Section 424(b)(2) of Public Law 113-235, the "Consolidated and Further Continuing Appropriations Act, 2015." The provision states in part: "[the requirements] shall not apply in any case or category of cases in which the Administrator of the Environmental Protection Agency…finds that…iron and steel products are not produced in the United States in sufficient and reasonably available quantities and of a satisfactory quality."

The purpose of the plunger valves in the DCWCD Victory Pipeline Project is to control pressure at metered connections to retail water suppliers. Demands exceeding contracted peak capacities can create a significant pressure loss in the pipeline. The plunger valve can be controlled remotely to limit flows and prevent insufficient system pressures. DCWCD examined two alternate valve designs including diaphragm valves and sleeve valves. Diaphragm valves do not meet the technical specifications of the project because, unlike plunger valves, these valves are

not true anti-cavitation valves and would likely be damaged in the project applications. Sleeve valves are not a viable alternative because their design utilizes small-hole perforations which are prone to clogging, leading to higher repair and failure rates. The sleeve valves must be removed from the pipe and sent away to be repaired, which is not acceptable because the system cannot be shut down for a sustained period of time. The plunger valve can be repaired in situ. The plunger valve which the recipient selected for use in the Victory Pipeline Project that meets the project needs is manufactured outside of the United States. The assistance recipient was unable to find plunger valves manufactured domestically that meet the project's technical specifications.

EPA conducted market research on the supply and availability of plunger valves and concluded that there are no domestic manufacturers of plunger valves that meet the project's technical specifications, supporting DCWCD's claim. EPA identified two manufacturers of plunger valves; however, both of the manufacturers informed EPA that they do not produce these plunger valves domestically.

Having established both a proper basis to specify the particular product required for this project and that this product was not available from a manufacturer in the United States, DCWCD is hereby granted a waiver from the AIS requirements for the Victory Pipeline Project. This waiver permits the purchase of non-domestic plunger valves using DWSRF funds as documented in the State of Utah's waiver request submittal on behalf of the assistance recipient, dated October 30, 2014.

Legal Authority: Legal authority for the AIS requirements for DWSRF projects is included under P.L. 113-235, the "Consolidated and Further Continuing Appropriations Act, 2015," under the authority of Section 424(b)(2) and also previously under P.L. 113-76.

If you have questions concerning the contents of this memorandum, please contact Kiri Anderer, Environmental Engineer, Drinking Water Protection Division, at anderer.kirsten@epa.gov or (202) 564-3134.